JVC

DIGITAL VIDEO CAMERA

GR-DVM1

ENGLISH

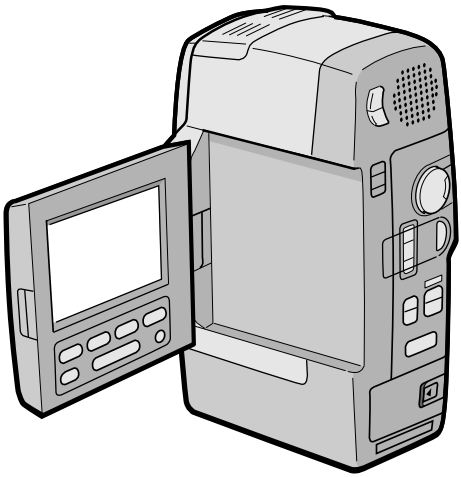

Mini DV PAL

INSTRUCTIONS

LYT0002-088B

EN

Dear Customer,
Thank you for purchasing this Digital Video Camera. Before use, please read the safety information and precautions contained in the following pages to ensure safe use of this product.

Using This Instruction Manual
- All major sections and subsections are listed in the Table Of Contents (☞ pg. 7).
- Notes appear after most subsections. Be sure to read these as well.
- Basic and advanced features/operation are separated for easier reference.

It is recommended that you . . .
..... refer to "Controls, Indications and Connectors" (☞ pgs. 73 – 76) and familiarize yourself with button locations, etc. before use.
..... read thoroughly the Safety Precautions and Safety Instructions that follow. They contain extremely important information regarding the safe use of your new camcorder.

You are recommended to carefully read the cautions on pages 77 and 78 before use.

SAFETY PRECAUTIONS

CAUTIONS:
- To prevent shock, do not open the cabinet. No user serviceable parts inside. Refer servicing to qualified personnel.
- When you are not using the AC Power Adapter/Battery charger for a long period of time, it is recommended that you disconnect the power cord from AC outlet.

WARNING:
TO PREVENT FIRE OR SHOCK HAZARD, DO NOT EXPOSE THIS UNIT TO RAIN OR MOISTURE.

Warning on lithium cell battery
The battery used in this device may present a fire or chemical burn hazard if mistreated. Do not recharge, disassemble, heat above 100°C (212°F) or incinerate.
Replace battery with Panasonic (Matsushita Electronic), Sanyo or Maxell CR2025; use of another battery may present a risk of fire or explosion.
- Dispose of used battery properly.
- Keep away from children.
- Do not disassemble and do not dispose of in fire.

CAUTION (applies to the Docking Station):
TO REDUCE THE RISK OF FIRE, DO NOT REMOVE COVER (OR BACK). NO USER–SERVICEABLE PARTS INSIDE. REFER SERVICING TO QUALIFIED SERVICE PERSONNEL.

NOTES:
- *The rating plate (serial number plate) and safety caution are on the bottom and/or the back of the main unit.*
- *The rating plate (serial number plate) of the AC Power Adapter/Charger is on its bottom.*
- *The rating plate (serial number plate) of the Docking Station is on its bottom.*

This camcorder is designed to be used with PAL-type colour television signals. It cannot be used for playback with a television of a different standard. However, live recording and viewfinder playback are possible anywhere. Use the BN-V812U battery pack and, to recharge it, the provided multi-voltage AC Power Adapter/Charger. (An appropriate conversion adapter may be necessary to accommodate different designs of AC outlets in different countries.)

This unit is produced to comply with Standard IEC Publ. 65.

SAFETY PRECAUTIONS

Do not point the lens or the viewfinder directly into the sun. This can cause eye injuries, as well as lead to the malfunctioning of internal circuitry. There is also a risk of fire or electric shock.

CAUTION! The following notes concern possible physical damage to the camcorder and to the user.

When carrying, be sure to always attach and use the provided hand strap. Hold the camcorder firmly in your hand, with the strap securely around your wrist. Carrying or holding the camcorder by the viewfinder can result in dropping the unit, or in a malfunction.

Take care not to get your finger caught in the cassette cover. Do not let children operate the camcorder, as they are particularly susceptible to this type of injury.

Do not use a tripod on unsteady or unlevel surfaces. It could tip over, causing serious damage to the camcorder.

CAUTION! Attaching the camcorder to the Docking Station, connecting cables (AUDIO/VIDEO, S-VIDEO, Editing, DC) and leaving the unit on top of the TV is not recommended, as tripping on the cables will cause the camcorder to fall, resulting in damage.

Mini DV PAL

■ This camcorder is designed exclusively for the Mini DV digital video cassette. Only cassettes marked Mini DV can be used with this unit.

About Batteries

DANGER! Do not attempt to take the batteries apart, or expose them to flame or excessive heat, as there is a risk of fire or explosion.

WARNING! Do not allow the battery terminals, or the battery itself, to come in contact with metals, as this can result in a short circuit and possibly start a fire.

- When transporting, make sure the provided battery cap is attached to the battery. If you misplace the battery cap, carry the battery in a plastic bag.

Before recording an important scene . . .

..... make sure you only use cassettes with the Mini DV mark.

..... remember that this camcorder is not compatible with other digital video formats.

..... remember that the this camcorder is intended for private consumer use only. Any commercial use without proper permission is prohibited. (Even if you record an event such as a show, performance or exhibition for personal enjoyment, it is strongly recommended that you obtain permission beforehand.)

The Benefits Of Lithium-Ion Batteries

Lithium-ion battery packs are small but possess a large power capacity. However, when the battery pack becomes cool in an environment subject to cold temperatures (below 10°C/50°F), the battery pack has a characteristic that its usage time becomes shorter and may cease to function. If this happens, place the battery pack in your pocket or other warm, protected place for a short time, then re-attach it to the camcorder. As long as the battery pack itself is not cold, it should not affect performance.
(If you're using some kind of heating pad, make sure the battery pack does not come in direct contact with the pad.)

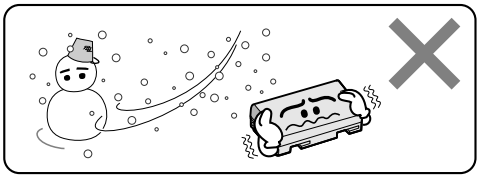

Lithium-ion is vulnerable in colder temperatures.

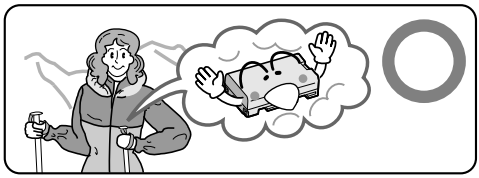

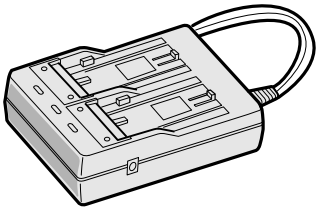

AC Power Adapter/Charger AA-V80EG

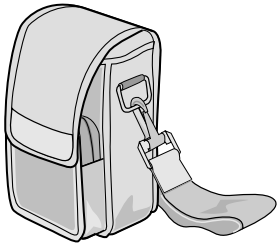

Soft camera case

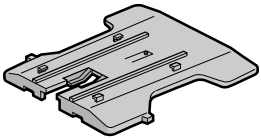

CAM Stand

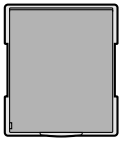

Sun hood

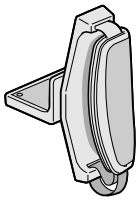

Grip

Hand strap

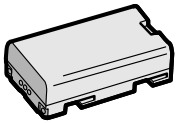

Battery pack BN-V812U

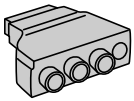

Cable adapter

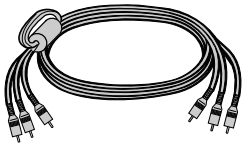

AUDIO/VIDEO cable (Docking Station to TV or VCR, RCA plug ► RCA plug)

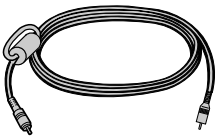

VIDEO cable (ø 3.5, camcorder to TV or VCR, mini-plug ► RCA plug)

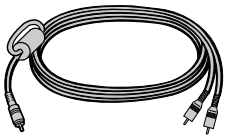

AUDIO cable (ø 3.5, camcorder to TV or VCR, mini-plug ► RCA plug)

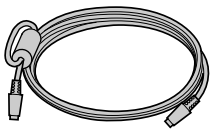

S-VIDEO cable

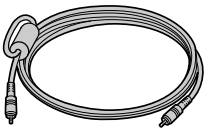

Editing cable

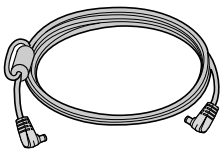

DC cord

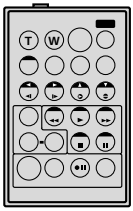

Remote control unit
RM-V708U or RM-V710U

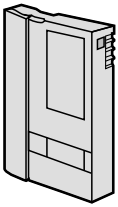

MiniDV Cassette Tape 30 min (DVM-30)
M-DV30ME

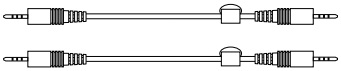

JLIP connection cables x 2,
3.5 mm dia

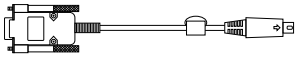

Computer connection cable,
D-SUB 9-pin

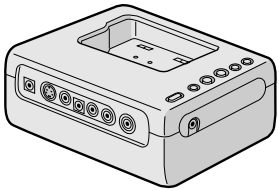

JLIP Video Capture Docking Station
GV-DS1 (referred to in the manual as "Docking Station")

Use of the JLIP Video Capture Docking Station enables you to capture video images from video sources such as camcorders and VCRs.
Also refer to the JLIP Video Capture Docking Station's instruction manual.

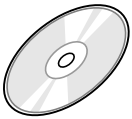

CD-ROM
The CD ROM contains the following 2 software programs:

- **JLIP Video Capture**
- **JLIP Movie Player**

Lithium battery CR2025 x 2
(one for clock operation and one for remote control unit)

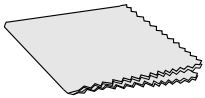

Cleaning cloth

The digital video camera converts incoming audio and video signals into digital form for recording.

A video signal is composed of a luminance signal (Y) and colour signals (R-Y and B-Y). These signals are identified and recorded digitally (Digital Component Recording). The A/D (Analog to Digital) converter samples the Y signal at 13.5 MHz, and R-Y and B-Y at 6.75 MHz, and changes them to an 8-bit quantum signal.

Sound sampled at 48 kHz is changed to a 16-bit quantum signal, and sound sampled at 32 kHz is converted to a 12-bit signal.

NOTE:

The data recorded on a tape is digital, but the output of the this camcorder is analog.

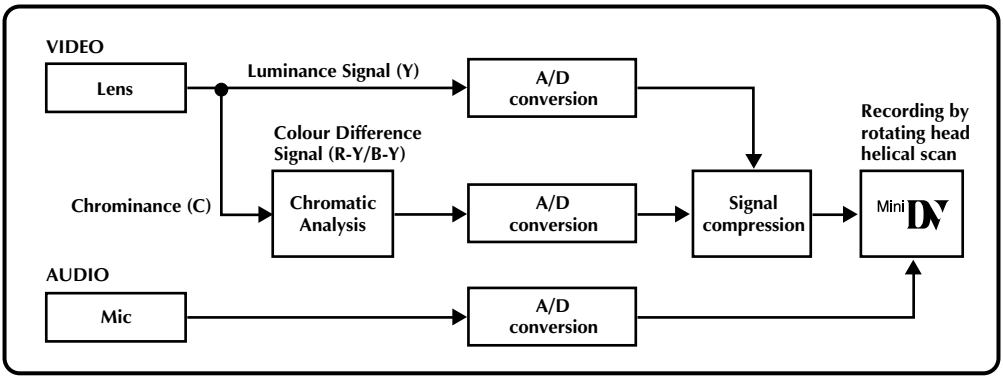

This camcorder separates the data into blocks, writing one block of each data type on each track of the tape.

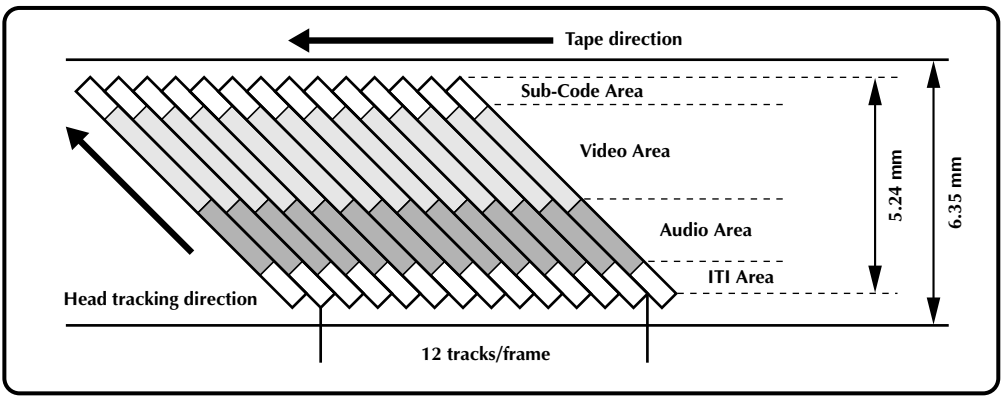

❶ Sub-Code Area

The Time Code and Date/Time data are written here, separate from the video data. This enables you to display the date and time during playback, even if they weren't displayed while recording.

❷ Video Area

The digital video signal is recorded here.

❸ Audio Area

The digital audio signal is recorded here.

❹ ITI (Insert and Tracking Information) Area

Insert editing and post-recording editing tracking signals are recorded here.

PROVIDED ACCESSORIES **4**
ABOUT DV **6**
GETTING STARTED **8**
- **Charging The Battery Pack** ... 8
- **Installing The Battery Pack** ... 9
- **Indoor Use** ... 10
- **Using The CAM Stand** ... 10
- **Clock (Lithium) Battery CR2025 Insertion/Removal** ... 11
- **Date/Time Settings** ... 12
- **Loading/Unloading A Cassette** ... 13
- **Recording Mode Setting** ... 14
- **Hand Strap Attachment** ... 14
- **Lens Cover Detachment** ... 14
- **Sun Hood Attachment** ... 15
- **Grip Attachment** ... 16
- **Remote Control Unit** ... 17

RECORDING **18**
- **Full Auto/Manual Operation** ... 18
- **Basic Recording** ... 19
- **Advanced Features** ... 26

PLAYBACK **49**
- **Basic Playback** ... 49
- **Basic Connections** ... 50
- **Playback Menu** ... 54
- **Advanced Features** ... 56

EDITING **58**
- **Docking Station** ... 58
- **Dubbing** ... 58
- **Brand Setting** ... 59
- **Random Assemble Editing** ... 60
- **For More Accurate Editing** ... 63
- **Audio Dubbing** ... 65
- **Insert Editing** ... 66

TROUBLESHOOTING **67**
AFTER USE **72**
CONTROLS, INDICATIONS AND CONNECTORS **73**
- **Main Unit** ... 73
- **LCD Monitor Indications During Recording** ... 74
- **LCD Monitor Indications During Playback** ... 75
- **Warning Indications** ... 75
- **JLIP Video Capture Docking Station** ... 76

CAUTIONS **77**
SPECIFICATIONS **79**
GLOSSARY OF TERMS **81**
INDEX **82**

Charging The Battery Pack

You can charge one battery pack at a time, or two consecutively.

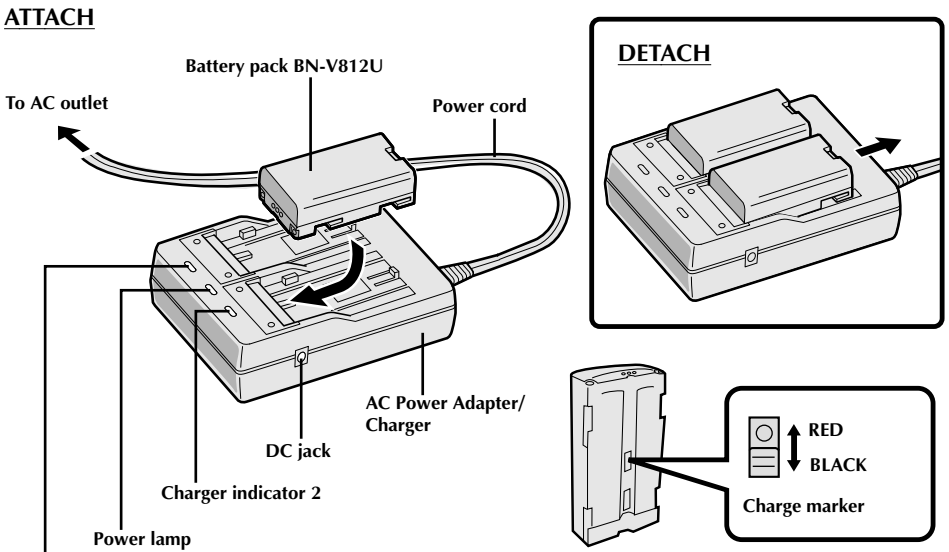

• The charge marker does not move by itself. After charging or removing a discharged battery, be sure to set the marker to the predetermined position.

1 SUPPLY POWER TO CHARGER

Plug the AC Adapter/Charger's power cord in to an AC outlet. The power indicator comes on.

2 ATTACH BATTERY/BATTERIES

Make sure the + – marks are facing down and aligned with the corresponding marks on the AC Power Adapter/Charger.

• The Charge Indicator (1 or 2) begins blinking to indicate charging has started.

3 CONFIRM STATUS

When the charger indicator stops blinking but stays lit, charging is finished.

• If two batteries are attached to the charger, they will be charged in the order that they were attached.

CHARGING TIME

BATTERY	ONE	TWO
BN-V812U	approx. 100 min.	approx. 200 min.

4 DETACH BATTERY/BATTERIES

Slide the battery or batteries in the direction of the arrow and lift off.

• Remember to unplug the AC Adapter/ Charger's power cord from an AC outlet.

Charge Marker

The charge marker makes it easy for you to differentiate between charged and discharged batteries. Choose RED or BLACK to mean charged or discharged, and you'll always know the status of your batteries.

NOTES:

- *If you connect the camcorder's DC cord to the adapter during battery charging, power is supplied to the camcorder and charging stops.*
- *When using the AC Power Adapter/Charger, be sure to use the supplied power cord only.*
- *The AC Power Adapter/Charger is for use with the BN-V812U Battery Pack only.*
- *When charging the Battery Pack for the first time or after a long storage period, the Charge Indicator may not light. In this case, remove the Battery Pack from the AC Power Adapter/Charger, then try charging again.*
- *Since the AC Power Adapter/Charger processes electricity internally, it becomes warm during use. Be sure to use it only in well-ventilated areas.*

**** Charging Environment**

Perform charging where the temperature is between 10° and 30°C. (20°–25°C is the ideal temperature range for charging.) If the environment is too cold, charging may be incomplete.

Continuous Shooting

Continuous shooting is possible for approximately 60 minutes, under the following conditions:

- A BN-V812U Battery Pack is in use
- The temperature is approximately 20°C/68°F

However, . . .

- If the temperature is below 10°C/50°F, or
- If zoom or Record/Standby are engaged repeatedly, continuous shooting capability is reduced significantly. Before extended use, it is recommended that you prepare enough battery packs to cover 3 times the planned shooting time.

Installing The Battery Pack

The battery pack does not charge while in the camcorder. Before installation, make sure the battery pack has been charged fully.

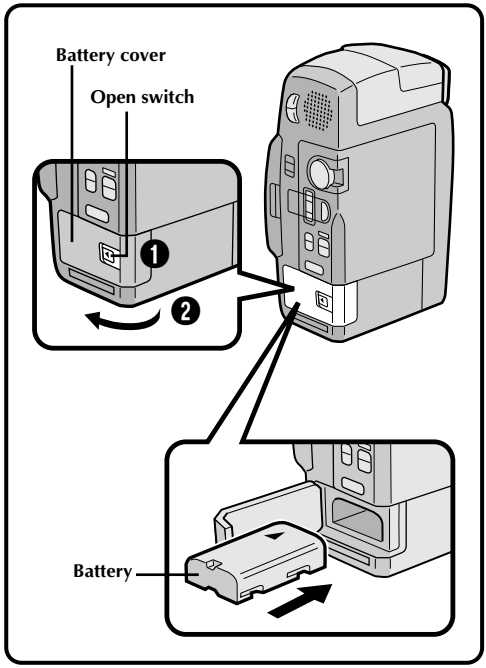

1 OPEN BATTERY COVER

❶ Slide the open switch on the battery cover.
❷ Pull open the battery cover in the direction of the arrow.

2 INSERT BATTERY

Insert the + – end of the battery first.

3 CLOSE BATTERY COVER

Slide the open switch and close the battery cover.

BATTERY	RECORDING TIME
BN-V812U	approx. 60 min.

NOTES:

- *To remove the battery pack, turn the Power Dial to "OFF", open the battery cover and slide the battery pack out.*
- *Be careful not to drop the battery pack.*

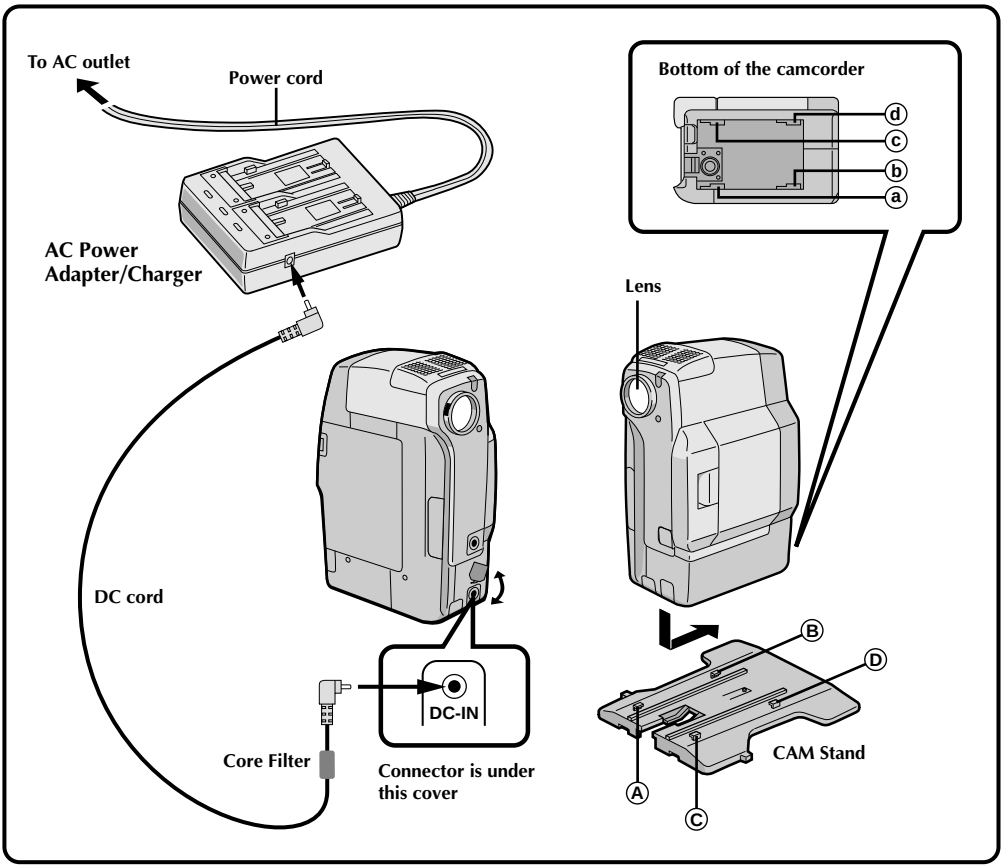

Indoor Use

When using the camcorder indoors, you can use the AC Adapter instead of a battery.

1 SUPPLY POWER TO ADAPTER
Plug the AC Adapter/Charger's power cord in to an AC outlet.

2 SUPPLY POWER TO CAMCORDER
Connect the AC Adapter to the camcorder.

NOTES:

- *When using the provided DC cord, make sure you connect the end of the cable with the core filter to the camcorder. The core filter improves performance of equipment.*
- *When using the AC Power Adapter/Charger, the "Battery Low" indicator (☞ pg. 75) may appear. This is not a malfunction.*

Using The CAM Stand

During Playback

If you leave the camcorder's power on for a long time while using it on a table top etc., the camcorder's surface may become hot. Attach it to the CAM Stand and play back.

During Recording

It is recommended to use the CAM Stand while shooting from a table top or any other flat surface. This provides stability to the camcorder.

1 SUPPLY POWER
Plug the DC cord into the camcorder.

2 ATTACH TO CAM STAND
Line up Ⓐ with ⓐ, Ⓑ with ⓑ, Ⓒ with ⓒ, and Ⓓ with ⓓ. Slide the camcorder in the direction of the arrow.

- To detach the camcorder, slide it in the opposite direction of the arrow.

Clock (Lithium) Battery CR2025 Insertion/Removal

This battery is necessary to operate the clock and to perform date/time settings.

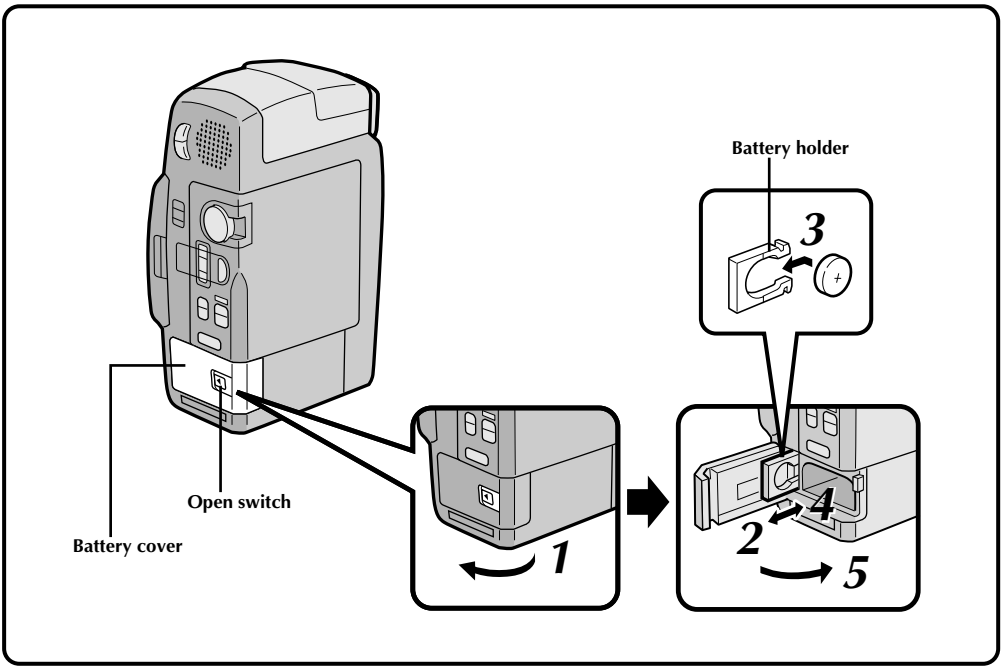

1 OPEN BATTERY COVER

❶ Slide the open switch on the battery cover.
❷ Pull open the battery cover in the direction of the arrow.

2 REMOVE OLD BATTERY

Pull the battery holer out in the direction of the arrow and slide the battery down and out of the holder.

3 INSERT NEW BATTERY

Insert the battery, with the "+" side showing, in the holder.

4 REPLACE BATTERY HOLDER

Insert the battery holder into the battery cover.

5 CLOSE BATTERY COVER

Slide the open switch and close the battery cover.

NOTES:

- *When the battery is depleted, the "⌂" indicator appears in the LCD monitor after you turn the power on.*
- *See "SAFETY PRECAUTIONS" on page 2 for information on safe handling of lithium batteries.*
- *After changing the lithium battery, reset the date and time (☞ pg. 12).*

Date/Time Settings

Date and time will automatically be recorded on tape at all times. It is your choice to display it or not during playback (☞ pg. 54).
To set date and time follow the instructions from 1 to 5.

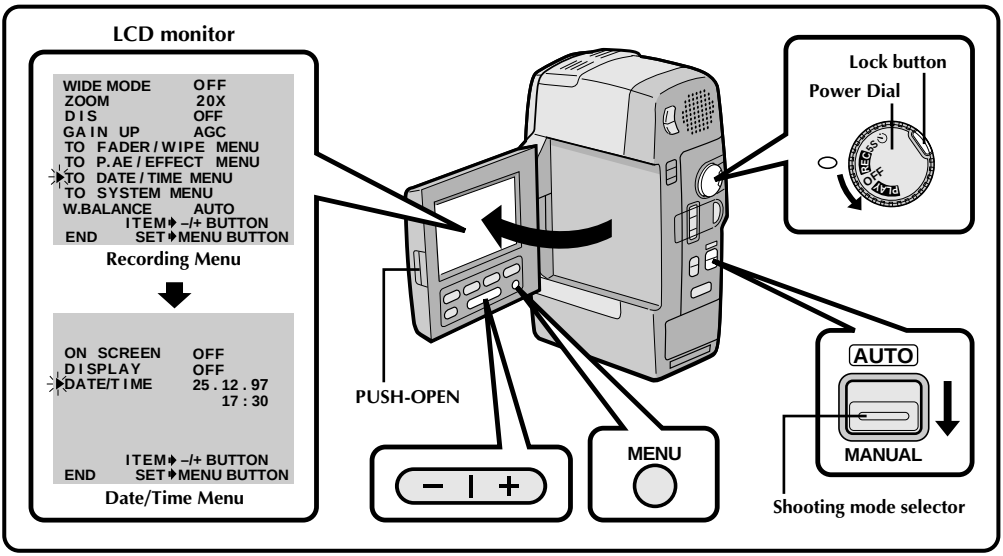

1 OPEN LCD MONITOR

First press **PUSH-OPEN** button and open the LCD monitor fully.

- The LCD monitor turns on/off automatically when it is opened/closed while the Power Dial is set to "REC".
- The LCD monitor can be tilted upward up to 180 degrees and downward up to 90 degrees.

2 SELECT OPERATION MODE

Set the Power Dial to "REC" by pressing down the lock button located on the dial and setting the shooting mode selector to "MANUAL".

3 ACCESS RECORDING MENU

Press **MENU**. The Recording Menu appears in the LCD monitor.

4 ACCESS DATE/TIME MENU

Place the pointer next to "TO DATE/TIME MENU" by pressing the **–/+** button. Press "**+**" to move up and "**–**" to move down. Press **MENU** and the Date/Time Menu appears in the LCD monitor.

5 INPUT DATE AND TIME

Place the pointer next to "DATE/TIME" by pressing the **–/+** button. Press **MENU** and "day" begins blinking.

Using the **–/+** button (press "**+**" to increase and "**–**" to decrease), input the day. Press **MENU**. Repeat the procedure to input the month, year, hour and minute. Press **MENU** when the pointer is next to "END" to exit.

NOTE:

If you don't exit the Date/Time Menu, the clock display will not move but the camcorder's internal clock continues to operate. Once you close the menu, the date and time in the LCD monitor begin operation from the current date and time, with no delay or loss.

Loading/Unloading A Cassette

The camcorder needs to be powered up to load or eject a cassette.

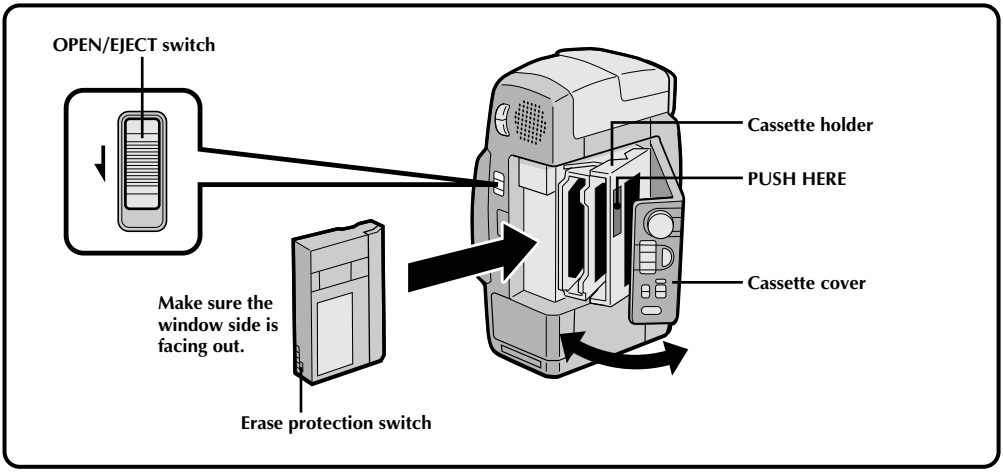

1 OPEN CASSETTE DOOR

Turn on the power, then slide the OPEN/EJECT switch in the direction of the arrow. The cassette cover releases. Open the cover in the direction of the arrow until it locks. The holder opens automatically.

- Before opening the cassette cover, disconnect the headphones and AUDIO/VIDEO connectors from the jacks because the cassette cover will interfere with them.
- Do not touch internal components.

2 INSERT/REMOVE TAPE

Insert or remove a tape and press "PUSH HERE" to close the cassette holder.

- Once the cassette holder is closed, it recedes automatically. Wait until it recedes completely before closing the cassette cover.
- When the battery's charge is low, you may not be able to close the cover. Do not apply force. Replace the battery with a fully charged one before continuing.

RECORDING TIME

TAPE	RECORDING MODE	
	SP	LP
DVM-30	Approx. 30 min.	Approx. 45 min.
DVM-60	Approx. 60 min.	Approx. 90 min.

NOTES:

- *It takes a few seconds for the cassette holder to open. Do not apply force.*
- *If you wait a few seconds and the cassette holder doesn't open, close the cassette cover and try again.*
- *Be careful not to get your fingers caught in the holder when it's closing. If this happens, the holder will open automatically after a few seconds.*
- *When the camcorder is suddenly moved from a cold place to a warm environment, wait a short time before opening the cover.*
- *Closing the cassette cover before the cassette holder comes out may cause damage to the camcorder.*
- *When shooting again after already shooting a scene, a blank portion is recorded on the tape or a previously recorded scene is erased (recorded over) if you open the cassette cover, regardless of whether the cassette holder comes out or not. See page 20 for information about recording from the middle of a tape.*

**** To protect valuable recordings . . .**

..... slide the erase protection switch on the back of the tape in the direction of "SAVE". This prevents this tape from being recorded over. If you decide later that you do want to record on this tape, slide the switch back to "REC" before loading the tape.

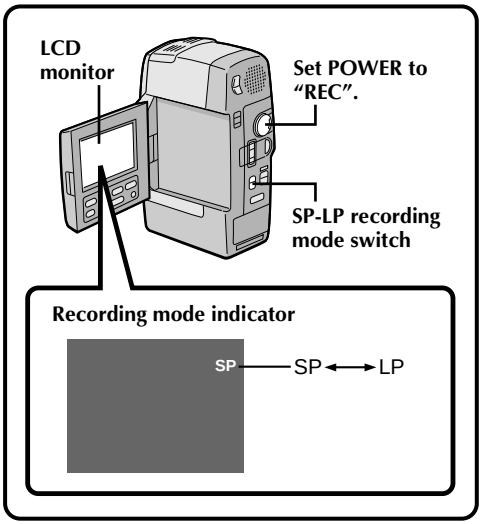

Recording Mode Setting

Set depending on your preference.

1 SET RECORDING MODE

Set SP•LP switch. "LP" (Long Play) is more economical, recording at 2/3 the speed of "SP" (Standard Play).

- Insert Editing or Audio Dubbing is impossible on a tape recorded in the LP mode.

NOTES:

- *If the recording mode is switched during recording, the playback picture will be blurred at the switching point.*
- *It is recommended that tapes recorded in the LP mode on this camcorder be played back on this camcorder.*
- *During playback of a tape recorded on another camcorder, blocks of noise may appear or there may be momentary pauses in the sound.*

Hand Strap Attachment

The provided Hand Strap helps you to keep a firm hold on the camcorder. Make sure you never hold the camcorder without using the Hand Strap.

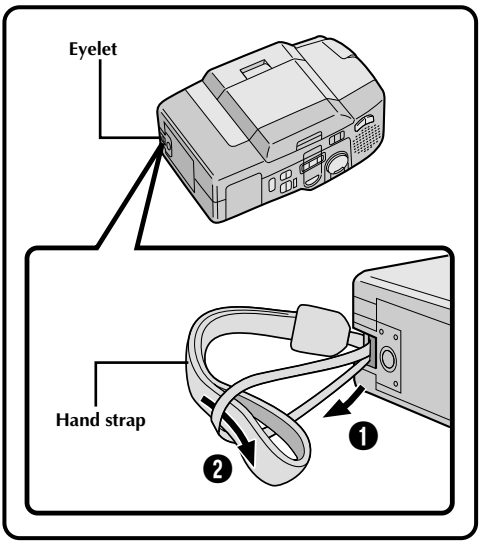

1 ATTACH HAND STRAP

Slide the strap through the eyelet, pulling firmly to ensure secure attachment.

Lens Cover Detachment

When using an optional conversion lens or lens filter (commercially available), you must first detach the lens cover.

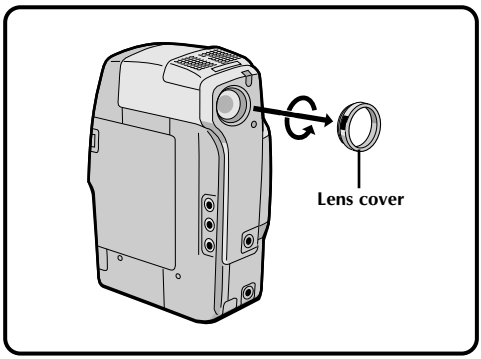

1 DETACH LENS COVER

Turn the lens cover in the direction of the arrow to detach it.

- To re-attach it, turn it in the opposite direction of the arrow.
- Do not forcefully re-attach the lens cover as this may damage its ridge, making further use of the lens cover impossible.
- Take care so that dust does not get on the lens.

Sun Hood Attachment

The sun hood shields the LCD monitor from reflection so that the user can watch it with ease even under direct sunlight. It also helps protect the monitor from damage.

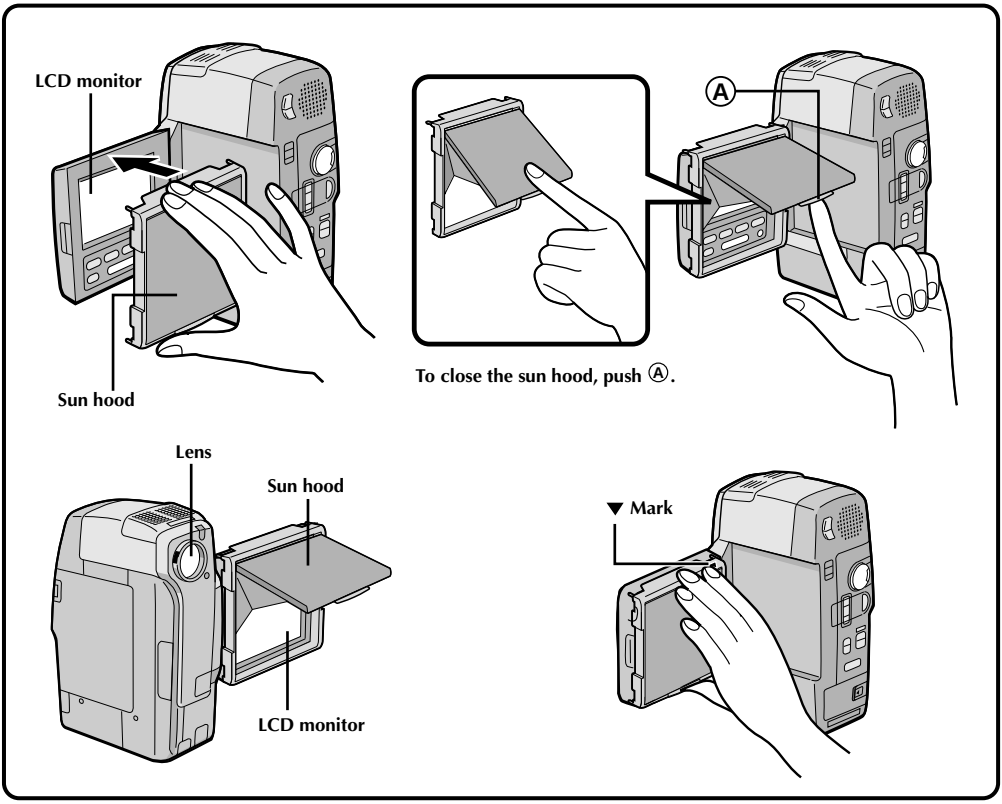

1 ATTACH SUN HOOD

Mount the sun hood on the LCD monitor so that it opens when you pull Ⓐ up.

- To detach, pull in the opposite direction of the arrow.

2 OPEN SUN HOOD

Pull Ⓐ up to open the sun hood.

3 DETACH SUN HOOD

- If detaching is difficult, grasp the sun hood at the positions marked with a ▼ on top and bottom, and pull toward yourself.

NOTE:

When not using the LCD monitor, detach the sun hood and close the LCD monitor. The LCD monitor can not be closed with the sun hood attached.

To use the sun hood when tilting the LCD monitor upward 180 degrees . . .

..... it is possible to attach the sun hood upside down. When turning over the LCD monitor, attach the sun hood upside down.

Grip Attachment

Use of the grip enables stable shooting.

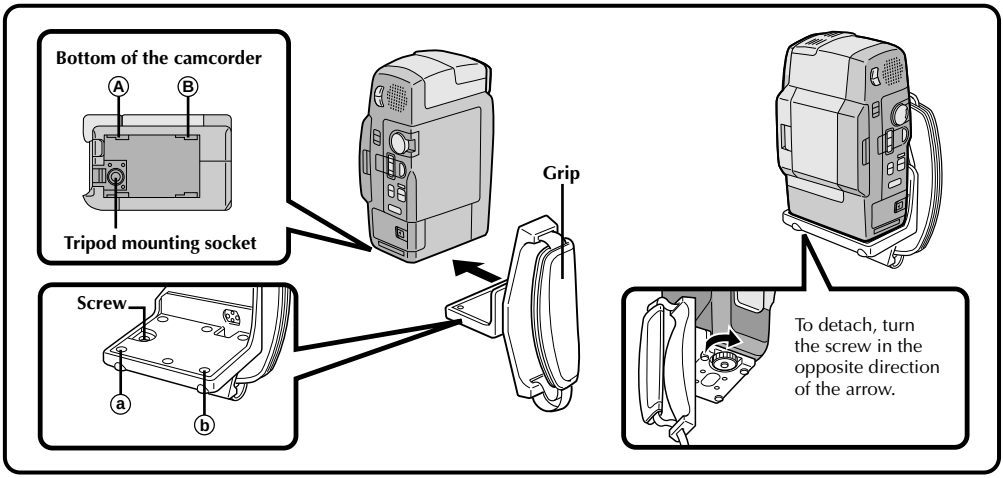

1 ALIGN
Align the grip's screw with the camcorder's socket for tripod mounting, Ⓐ with ⓐ and Ⓑ with ⓑ.

2 TIGHTEN
Tighten the screw in the directon of the arrow as in the illustrations.

Grip Adjustment

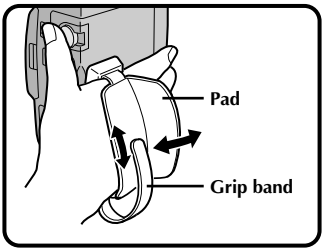

1 INSERT HAND
Pass your right hand through the loop and grasp the grip. Separate the pad. Take special care not to drop the camcorder.

2 ADJUST STRAP LENGTH
Adjust so your thumb and fingers can easily operate the **RECORDING START/STOP** button and the zoom switch. Refasten the grip band.

3 RE-ATTACH PAD

When loading/unloading a cassette . . .
..... tilt the grip toward you. You can load/unload a cassette with the grip attached.

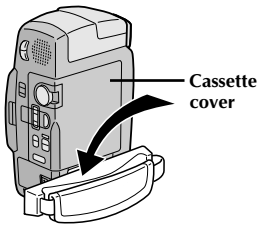

When mounting on a tripod . . .
..... align the tripod's screw with the mounting socket on the bottom of the grip.

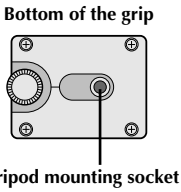

When putting the camcorder with the grip attached into the soft camera case . . .
..... insert with lens side down, slide the soft camera case's flap through the grip's loop and close the flap.

Remote Control Unit

You can use the RM-V708U or RM-V710U to control the camcorder when it's attached to the Docking Station.

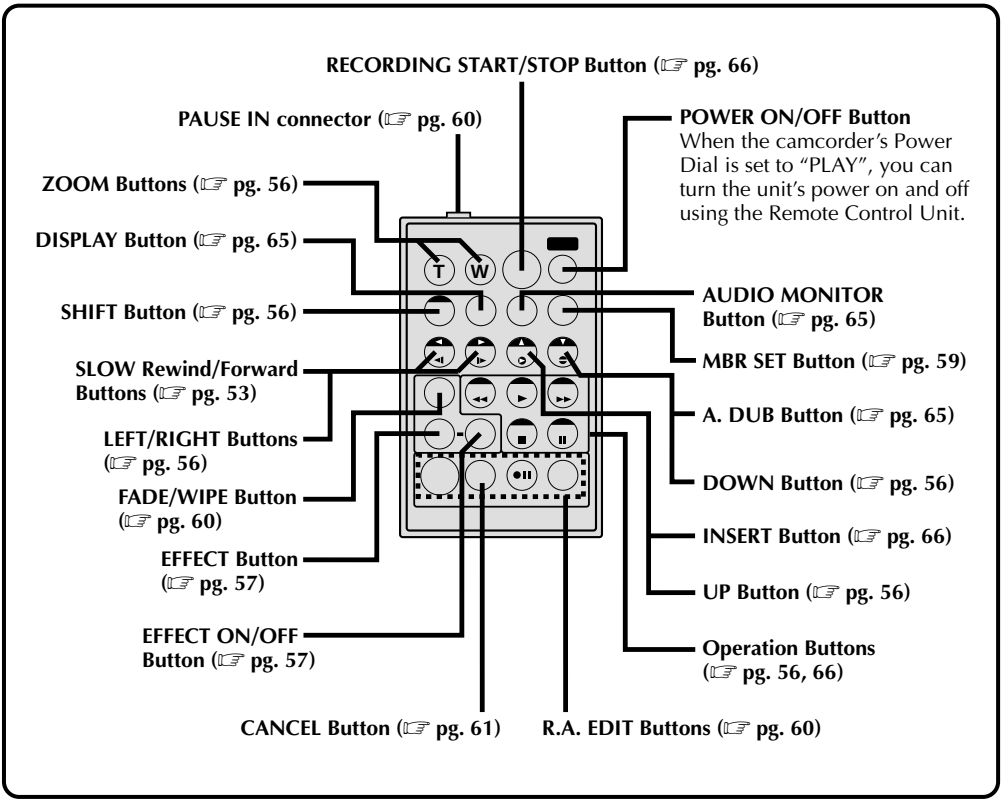

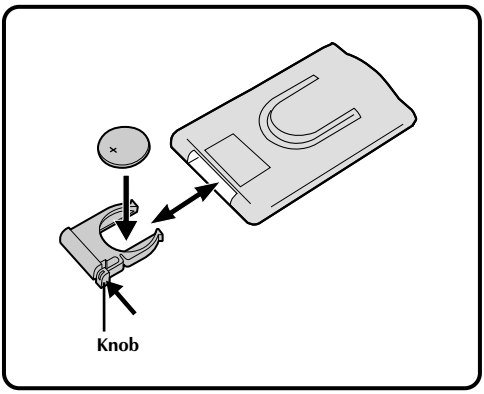

Installing The Battery

The RM-V708U or RM-V710U uses one lithium battery (CR2025).

1 PULL OUT BATTERY HOLDER
Pull out in the direction of the arrow while pressing the knob as shown.

2 INSERT BATTERY IN HOLDER
Insert the battery in the holder, and be sure to have the "+" mark visible.

3 RE-INSERT HOLDER
Slide the holder back in until you hear a click.

Full Auto/Manual Operation

The following chart shows you which functions are available in the Full Auto and Manual operation modes.

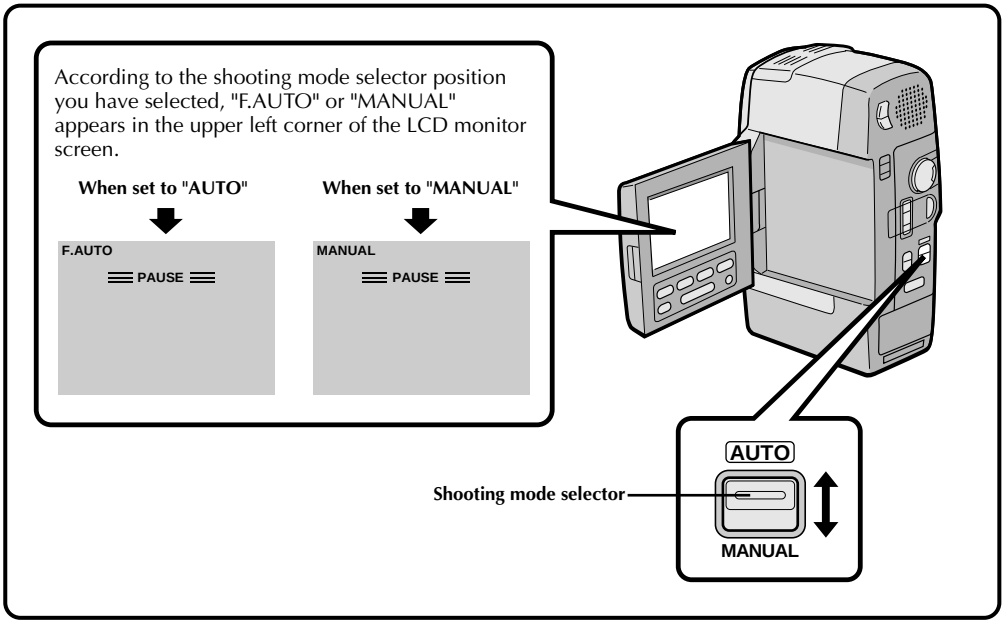

Function	Shooting mode selector position	
	F(ull) AUTO mode	MANUAL mode
Snapshot (☞ pg. 26)	YES***1** (Active until reset)	YES
Scene (☞ pg. 28, 33)	YES***2** (Active until reset)	YES
Self-Timer (☞ pg. 29)	YES	YES
Focus (☞ pg. 46)	AUTO	AUTO/MANUAL
D.I.Stabilizer (☞ pg. 31)***3**	Not operational	ON/OFF
Exposure Control (☞ pg. 47)	AUTO	AUTO/MANUAL
White Balance (☞ pg. 44)	AUTO	AUTO/MANUAL
Digital Zoom (☞ pg. 25)	20x only	ON/OFF
P.AE/Effects (☞ pg. 40)	Not operational	YES
FADER/WIPE (☞ pg. 34)	Not operational	YES

***1**– Only "ON" is available for "PHOTO FRAME" (☞ pg. 33). ("OFF" is not possible.) It is not possible to mute the shutter sound effect.
***2**– To change a setting in the system menu, follow steps on page 32. The new setting becomes available when you engage the “F.AUTO” mode.
***3**– Set to OFF at shipment.

Basic Recording

You should already have performed the necessary preparations (☞ pgs. 8 – 16). Set the shooting mode selector to "AUTO" and try recording that way before attempting to use more advanced features.

NOTE:

Before starting recording, make sure you set the date and time (☞ pg. 12). Even if they don't appear during recording, you can display them during playback (☞ pg. 55).

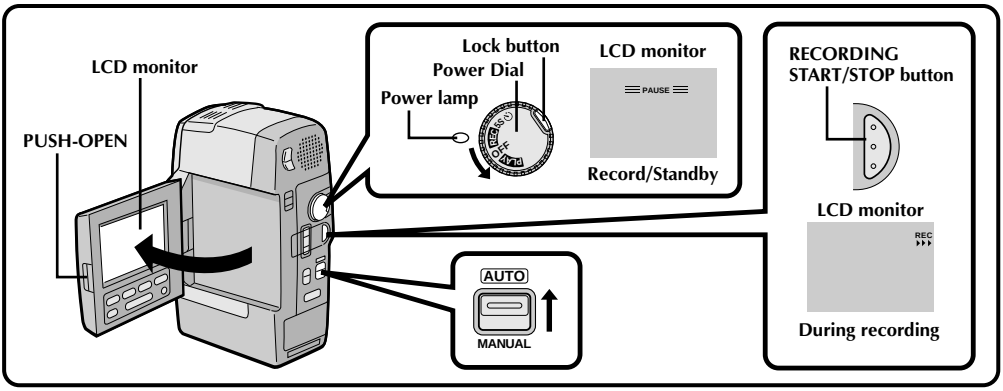

1 OPEN LCD MONITOR

Press **PUSH-OPEN** to open the LCD monitor fully.

- The LCD monitor turns on/off automatically when it is opened/closed while the Power Dial is set to "REC".

2 TURN ON POWER

Press the lock button located on the Power Dial and turn the Power Dial to "REC". The power lamp comes on and Record/Standby mode is engaged.

- If you don't open the LCD monitor, power cannot be turned on.

3 SELECT OPERATION MODE

Set the shooting mode selector to "AUTO".

- In the "AUTO" mode, only Zoom (20x), Snapshot, 5S (if you change the setting in the System Menu, either 5SD or ANIM. (animation) becomes available — see pg. 32, 33) and Self-Timer are available.

4 START RECORDING

When "PAUSE" appears in the LCD monitor, press **RECORDING START/STOP**. A beep signals the start of recording.

5 END RECORDING

When you're finished recording, press **RECORDING START/STOP**. Close the LCD monitor; the power lamp goes out.

- When transporting, make sure the LCD monitor is closed and locked.
- To turn power on again, open the LCD monitor.

OR

Set the Power Dial to "OFF".

- When turning to "OFF", it is not necessary to press down the lock button.

NOTES:

- *If 5 minutes elapse in the Record-Standby mode, power shuts off automatically to conserve energy and protect the heads. To turn the camcorder on again, set the Power Dial to "OFF", then to "REC". As long as you don't take out the tape you were using or play it back, you can continue from where you left off with no noticeable brake on the recorded video.*
- *When a blank portion is left between recorded scenes on the tape, the time code is interrupted and errors may occur when editing the tape. Continue recording from where you stop so there are no gaps by following "Recording from the middle of a tape" (☞ pg. 20).*
- *Recored/Standby means that a tape is loaded and the camcorder is ready to record.*
- *During recording, sound is not heard from the speaker. If you want to hear the sound, connect optional headphones to the headphones jack.*
- *The sun hood should be used when under direct sunlight.*

Recording From The Middle Of A Tape

When removing a tape on which you were recording, or when you resume recording on a tape after playing back the recording previously made (without taking the tape out between recordings), perform this procedure.

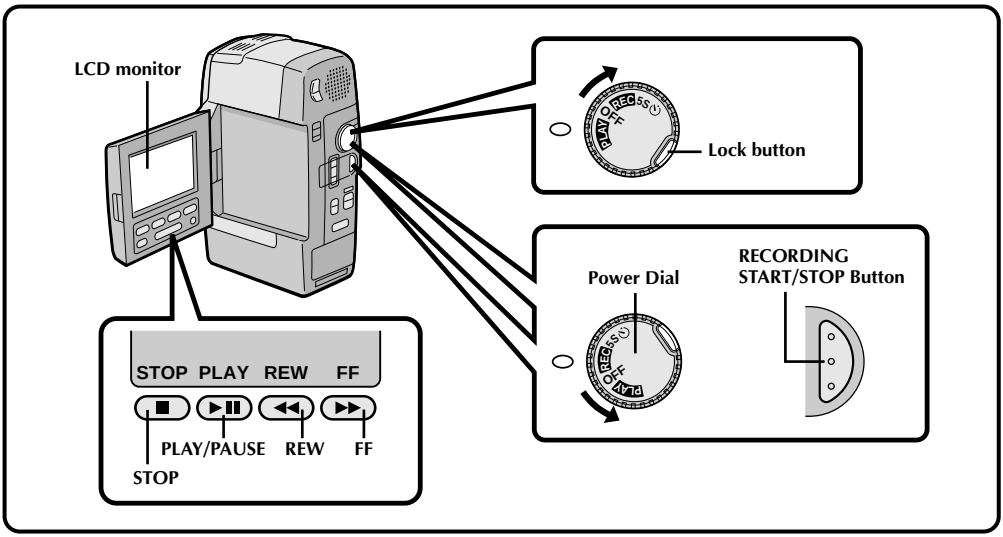

1 OPEN LCD MONITOR
Make sure the LCD monitor is open fully.

2 SELECT MODE
Press down the lock button located on the Power Dial and turn the Power Dial to "PLAY".

3 START SEARCH
Press **PLAY/PAUSE**, then press **REW** or **FF**. Watch in the LCD monitor for the spot where you want to begin recording.

4 ENGAGE STILL MODE
Once you find the spot at which you want to start recording, press **PLAY/PAUSE** to engage the Still mode.

5 START RECORDING
Set the Power Dial to "REC" and press **RECORDING START/STOP**.

- Start recording from a point prior to the end of the last recording. A few seconds of the end of the last recording will be erased.

NOTE:

If you start recording from the end of the previous recording leaving no blank space, there may be situations where a clean transition is not possible.

Time Code

During recording, a time code is recorded on the tape. This code is to confirm the location of the recorded scene on the tape during playback.
If recording starts from a blank portion, the time code begins counting from "00:00:00" (minute:second:frame). If recording starts from the end of a previously recorded scene, the time code continues from the last time code number.

To perform Snapshot Search (☞ pg. 27) and Random Assemble Editing (☞ pg. 60), time code is necessary. If during recording a blank portion is recorded partway through the tape, the time code is interrupted. When recording is resumed, the time code starts counting up again from "00:00:00". This means the camcorder may record the same time codes as those existing in a previously recorded scene. To prevent leaving a blank portion on a tape, perform the procedure in "Recording From The Middle of A Tape" (☞ pg. 20) in the following cases;

- After playing back the recorded tape, when you shoot again.
- When power shuts off during shooting.
- When a tape is removed and re-inserted during shooting.
- When shooting using a partially recorded tape.
- When shooting on a blank portion located partway through the tape.
- When shooting again after already shooting a scene and opening/closing the cassette cover.

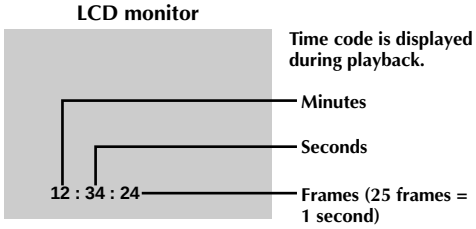

NOTES:

- *The Time Code cannot be reset.*
- *During fast-forwarding and rewinding, time code indication does not move smoothly.*

When blank portion is recorded on a tape

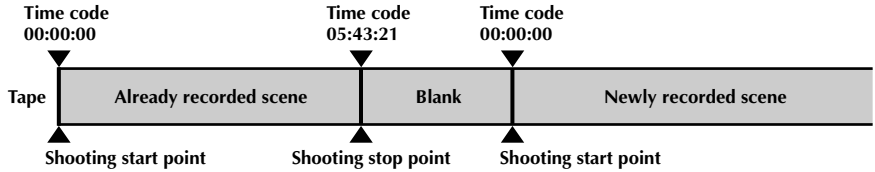

Proper recording

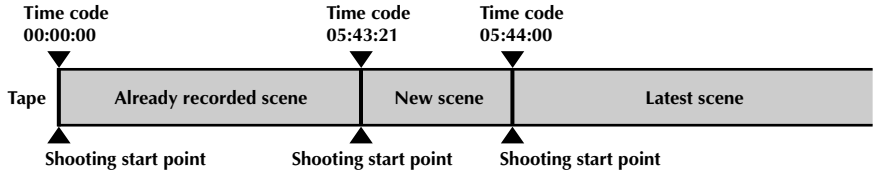

Tape Remaining Indicator

The time remaining on the tape is automatically monitored and displayed in the LCD monitor (☞ pg. 74). When the tape ends, "TAPE END" appears in the LCD monitor. If the LCD monitor indications are turned off (☞ pg. 23), the tape remaining indicator appears when remaining time reaches 2 minutes.

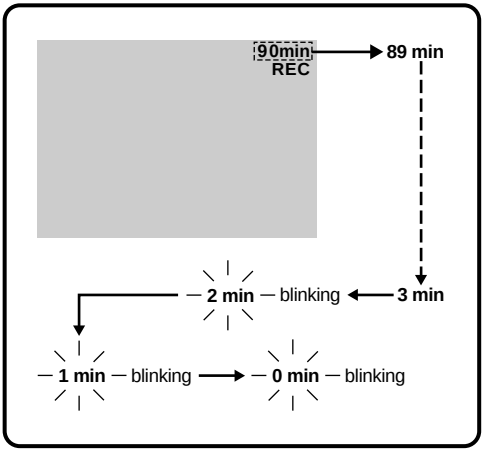

What Happens When You Shoot Sideways

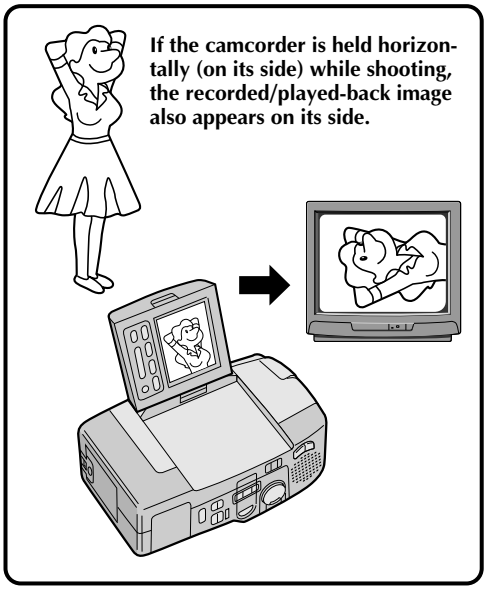

If the camcorder is held horizontally (on its side) while shooting, the recorded/played-back image also appears on its side.

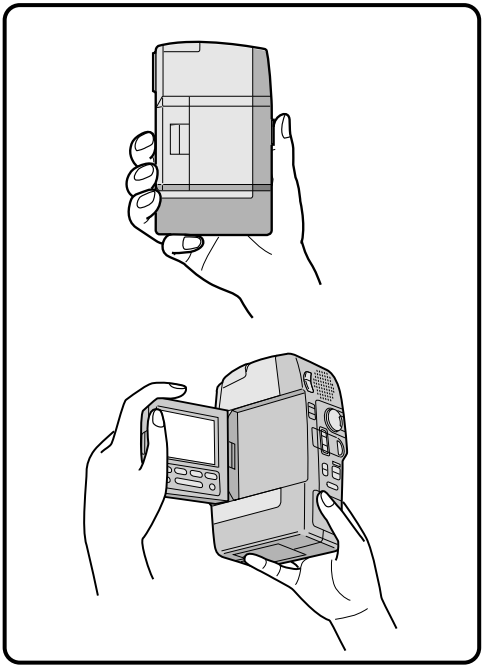

Holding The Camcorder

1 GRASP CAMCORDER

Grasp the camcorder with the pinkie finger positioned under the bottom of the camcorder.

- Be sure to use the provided hand strap.
- The grip is also recommended.

2 OPEN LCD MONITOR

Hold the camcorder with both hands for stable shooting.

- Be careful not to push the LCD monitor or the buttons you do not wish to use.

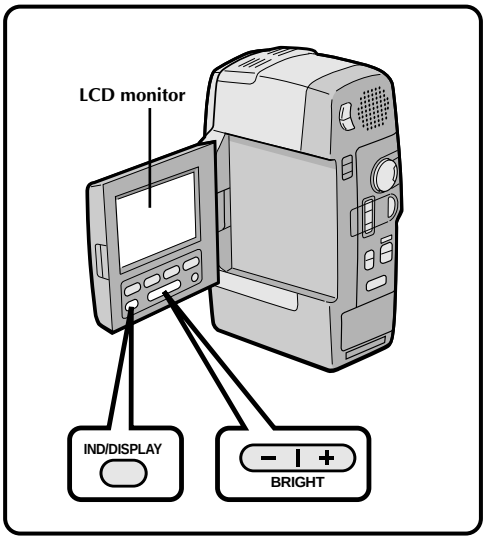

Brightness Control

You can adjust the brightness of the LCD monitor by pressing the –/+ button.

1 ADJUST BRIGHTNESS

If you want to brighten the image...
Press the "**+**" button.

If you want to darken the image...
Press the "**–**" button.

- The brightness indication appears in the LCD monitor.

LCD Monitor Indications

You can make the LCD monitor indications appear/disappear.

1 PRESS IND/DISPLAY BUTTON

When you do not want the indications to appear, press the **IND/DISPLAY** button. Certain indications disappear.
Press again to make the indicaitons reappear.

- If you keep this button pressed more than 2 seconds, the LCD monitor switches off. To turn on the LCD monitor again, keep **IND/DISPLAY** pressed more than 2 seconds.

NOTE:

It is impossible to make the tape running indicator and warnings disappear from the LCD monitor.

Journalistic shooting

In some situations different angles of shooting may be required for more dramatic results.

1 OPEN LCD MONITOR

Make sure the LCD monitor is fully open.

2 TILT LCD MONITOR

Tilt the LCD monitor in the most convenient direction.

- The LCD monitor can rotate almost full circle (270°: 90° downward, 180° upward).

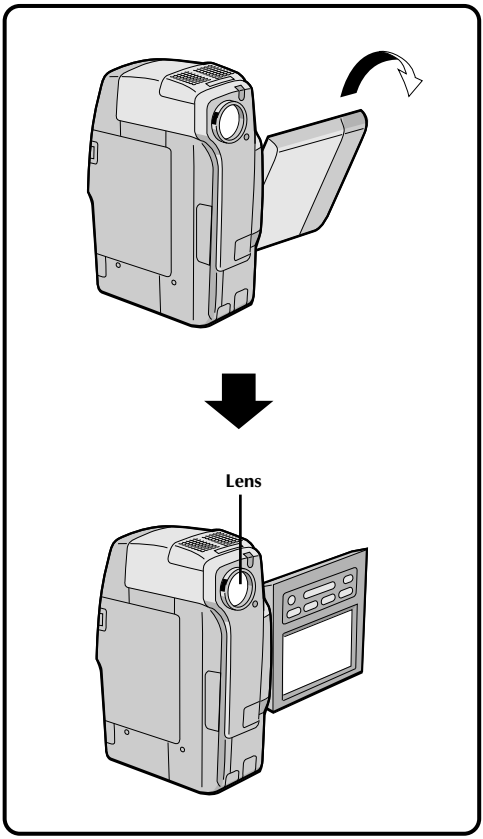

Interface Shooting

You can shoot yourself while viewing your own image in the LCD monitor.

1 TILT LCD MONITOR UPWARD

Open the LCD monitor and tilt it upward to 180 degrees so that it faces forward.

2 START RECORDING

Point the lens toward yourself and start recording.

- During Interface Shooting, the "Tape Running" indicator and warning indications (☞ pg. 74, 75) are the only ones that will be shown; they will appear horizontally reversed in the display, but are not reversed in the recording.

NOTE:

The tape remaining indicator does not appear during interface shooting. However, when the remaining time reaches 2 minutes, the indicator appears showing the remaining time: – – (blinking) ➔ – (blinking) ➔ (blinking)

Zoom

Select any one of the three powers of magnification and get "closer" to the subject (☞ pg. 31).

Simply set the zoom switch to either zoom in (toward "T") or zoom out (toward "W"). The zoom speed is variable — the quicker you set the zoom switch, the quicker the zoom action.

NOTE:

Digital zoom (20x and 100x) cannot be used while the Video Echo effect (☞ pg. 41), the Picture Wipe/ Dissolve function (☞ pg. 36) or the 5SD mode (☞ pg. 28) are activated.

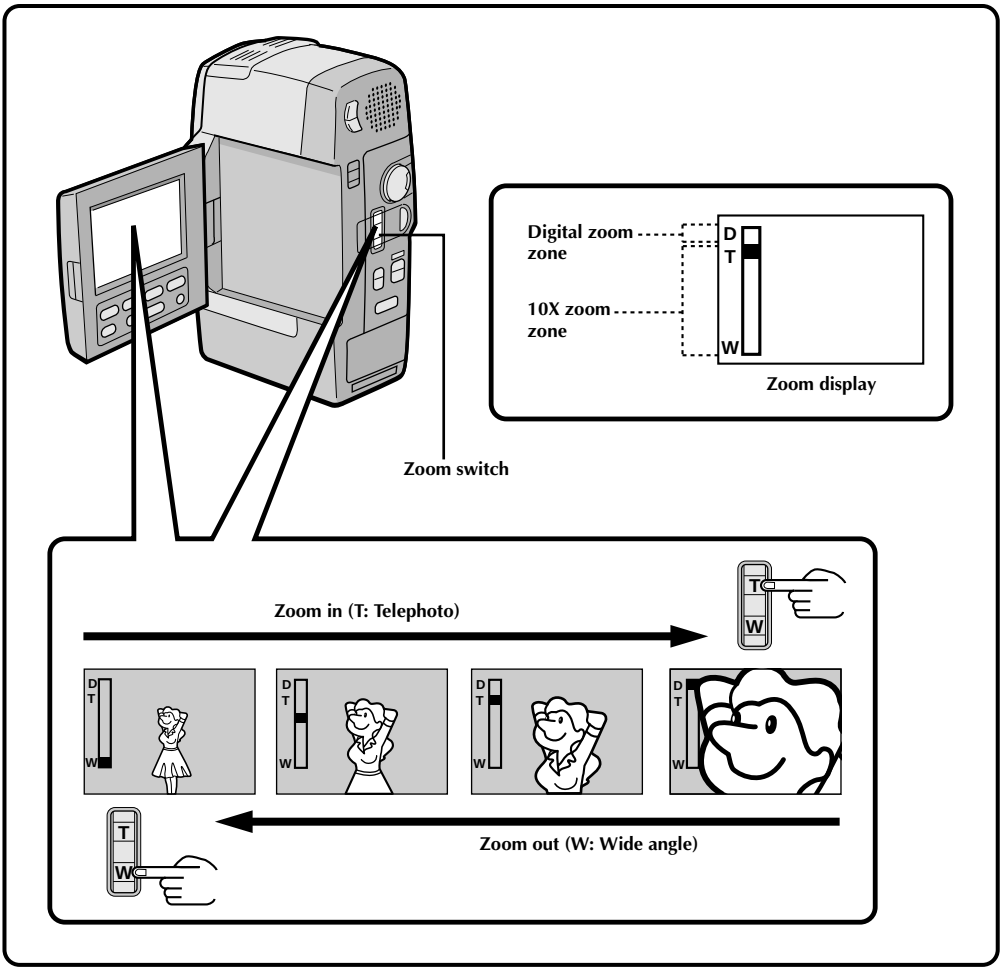

Snapshot

Use your camcorder like a regular camera and take a snapshot, or several of them in succession.

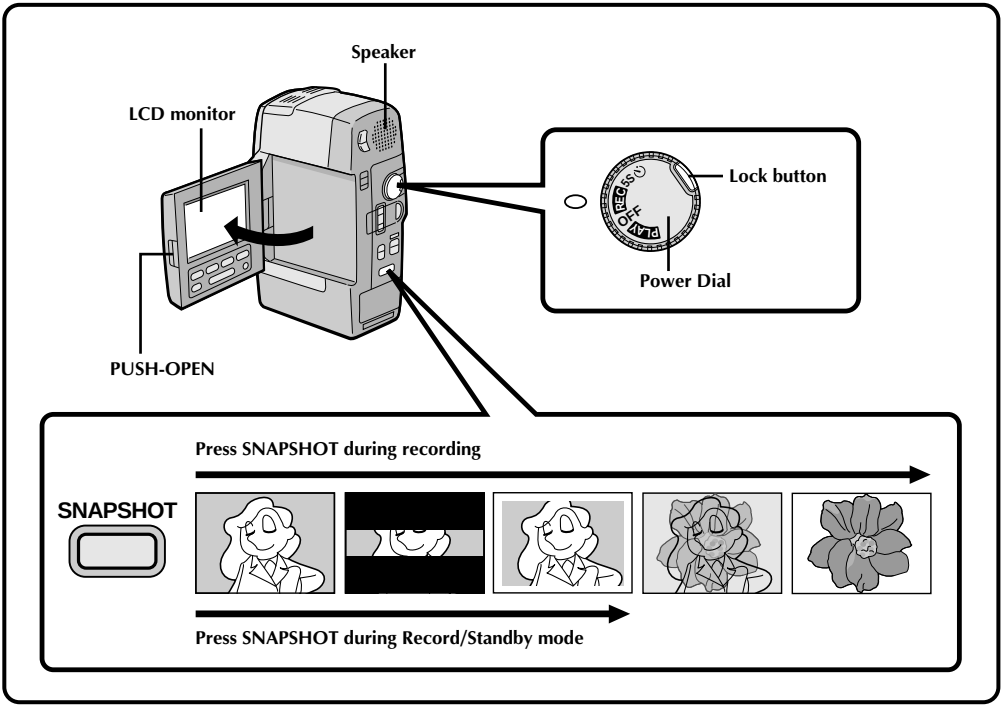

1 OPEN LCD MONITOR

Press the **PUSH-OPEN** switch and open the LCD monitor fully.

2 SELECT OPERATION MODE

Press the lock button located on the Power Dial and turn the Power Dial to "REC", "5S" or "⏲".

3 TAKE SNAPSHOT

Press the **SNAPSHOT Button**. "PHOTO" appears in the LCD monitor, and the image, bordered by a white frame, will be recorded and displayed in the LCD monitor for 6 seconds. The next image then gradually overlaps the snapshot and normal recording resumes.

- When using the Snapshot function from Record/Standby, the camcorder returns to Record/Standby after 6 seconds.
- The sound effect of a shutter closing is recorded together with the image.

Motor Drive mode:

Keeping **SNAPSHOT** pressed provides an effect similar to serial photography. (The interval between the still pictures: approx. 0.7 seconds).

Changing the Snapshot Setting:

- Still image with no frame can also be recorded (☞ pg. 32).
- When you don't want to hear the shutter sound, set BEEP/TALLY to "NO" in the system menu (☞ pg. 32). Though the sound is not heard from the speaker, it is recorded on the tape.

Snapshot Search

The Snapshot Search function enables you to quickly and easily access scenes recorded in the Snapshot mode, or scenes where Strobe (☞ pg. 41) was used.

1 ENABLE SNAPSHOT SEARCH
Set the Power Dial to "PLAY".

2 REWIND TAPE
Press **REW**. Let the tape rewind to the beginning, where it stops automatically.

3 BEGIN SEARCH
Press **SNAPSHOT**. The camcorder begins searching for the first scene recorded in Snapshot mode or where the Strobe effect was used.

- If the first scene on the tape was recorded in Snapshot mode or with the Strobe effect, the camcorder may not be able to locate the exact beginning of the scene.

Snapshot Search could malfunction if the recorded tape has:
- Too little time between Snap shots
- Blank space between recordings
- Snap shots taken using Motor Drive mode

To Stop A Snapshot Search In Progress . . .
..... press **SNAPSHOT** again.

NOTE:

By attaching the camcorder to the Docking Station and connecting a video printer to the station, it is possible to print out snapshots. (☞ pg. 49).

Scene

Record a vacation or an important event in 5-second clips to keep the action moving. The 5-Second function may also be activated during Full Auto operation. While the 5-Second mode is activated, Fade/Wipe (☞ pg. 34), P.AE/Effects (☞ pg. 40) and other manual operations cannot be performed.

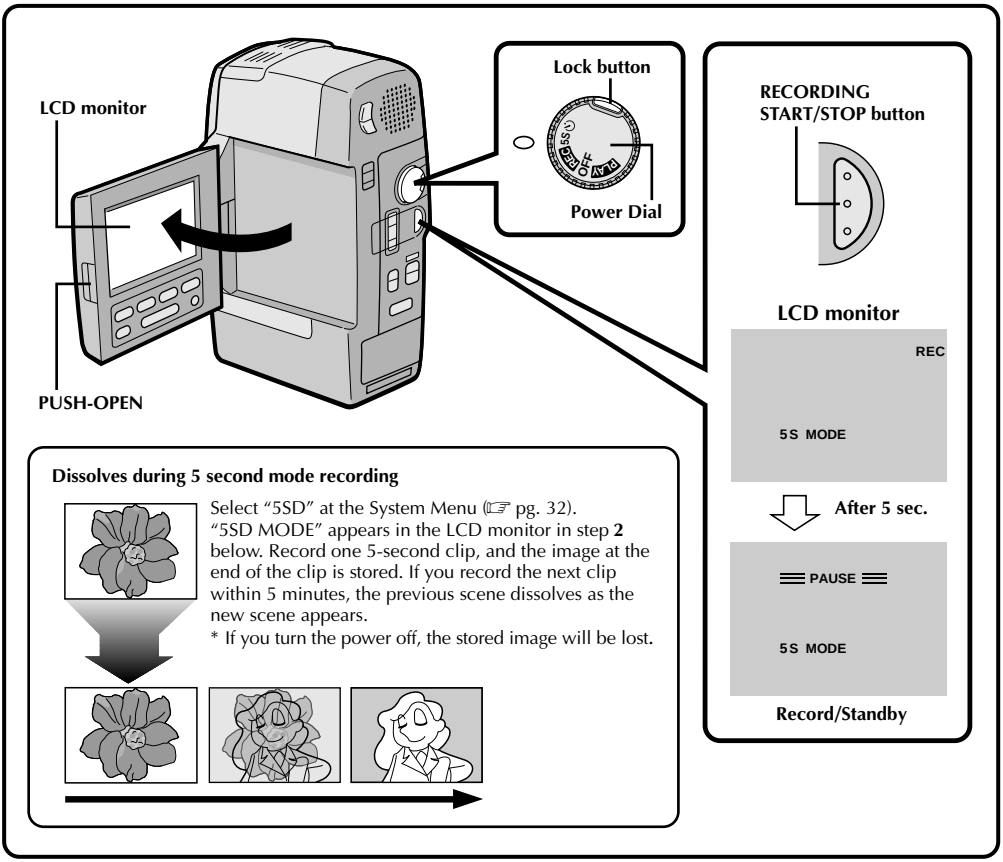

1 OPEN LCD MONITOR

Press the **PUSH-OPEN** switch and open the LCD monitor fully.

2 SELECT MODE

Press the lock button located on the Power Dial and turn the Power Dial to "5S". Then press **RECORDING START/STOP**. "5S MODE" appears in the LCD monitor, the tally lamp lights to indicate the start of recording, and after 5 seconds the camcorder enters Record/Standby mode.

- If you press and hold **RECORDING START/STOP** within 5 seconds after recording starts, Record/Standby mode is not engaged.

3 END 5-SECOND MODE RECORDING

Set the Power Dial to the "REC" or "OFF" position.

To Take A Snapshot In The 5-Second Mode . . .

..... instead of pressing **RECORDING START/STOP** in step **2**, press **SNAPSHOT**. The camcorder records a 6-second still with the shutter sound. (☞ pg. 26).

Self-Timer

Once the camcorder is set, the camcorder operator can become part of the scene in a more natural way adding the final touch to a memorable picture.

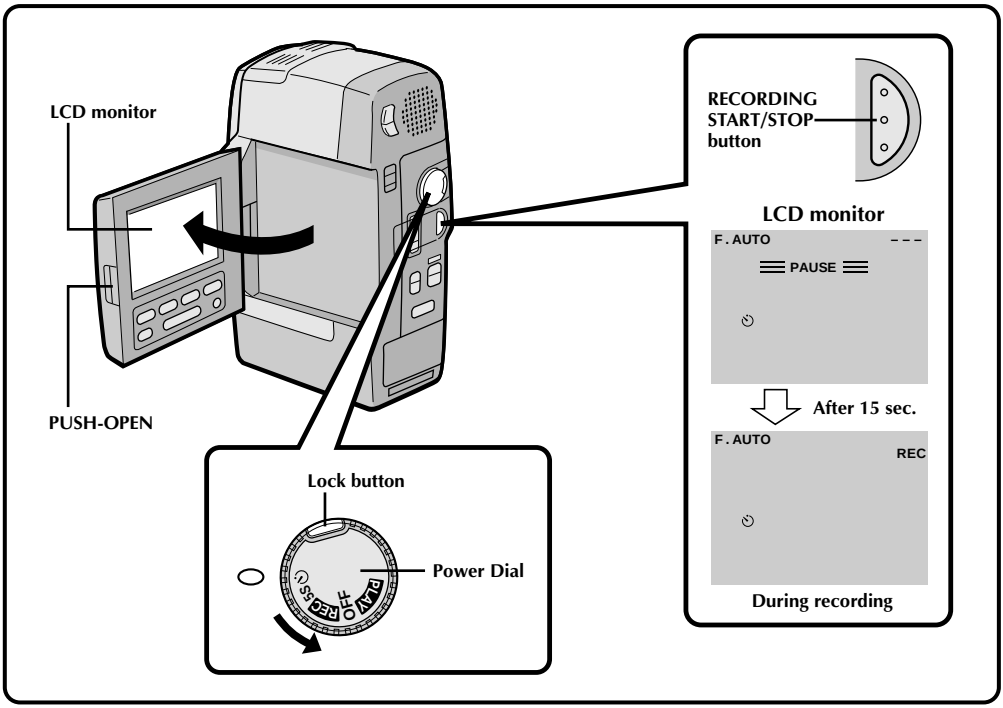

1 OPEN LCD MONITOR

Press the **PUSH-OPEN** switch and open the LCD monitor fully.

- You can tilt the LCD monitor upward to 180 degrees so that it faces forward and view yourself while self-recording.

2 SELECT MODE

Press the lock button located on the Power Dial and turn the Power Dial to "⏲" and press **RECORDING START/STOP**. "⏲" appears in the LCD monitor, and the tally lamp lights and begins blinking 15 seconds before recording starts. When the light stops blinking and stays on, recording begins.

3 END RECORDING

Press **RECORDING START/STOP** and set the Power Dial to the "REC" or "OFF" position.

- When turning to "OFF", it is not necessary to press down the lock button.

To Take A Snapshot In The Self-Timer Mode . . .

..... in step **2**, press **SNAPSHOT** instead of **RECORDING START/STOP**. After 15 seconds, a 6-second still with the shutter sound effect is recorded. After that, the camcorder enters the Record/Standby mode.

Menus

The Recording Menu allows you to set these functions: *Wide Mode, Zoom Magnification, Digital Image Stabilizer, Gain Up, Fade/Wipe (☞ pg. 38), P.AE/Effect (☞ pg. 42), Date/Time Menu, System Menu, and White Balance (☞ pg. 44)*. The following selection procedure applies to *Wide Mode, Zoom Magnification, Stabilization* and *Gain Up*.

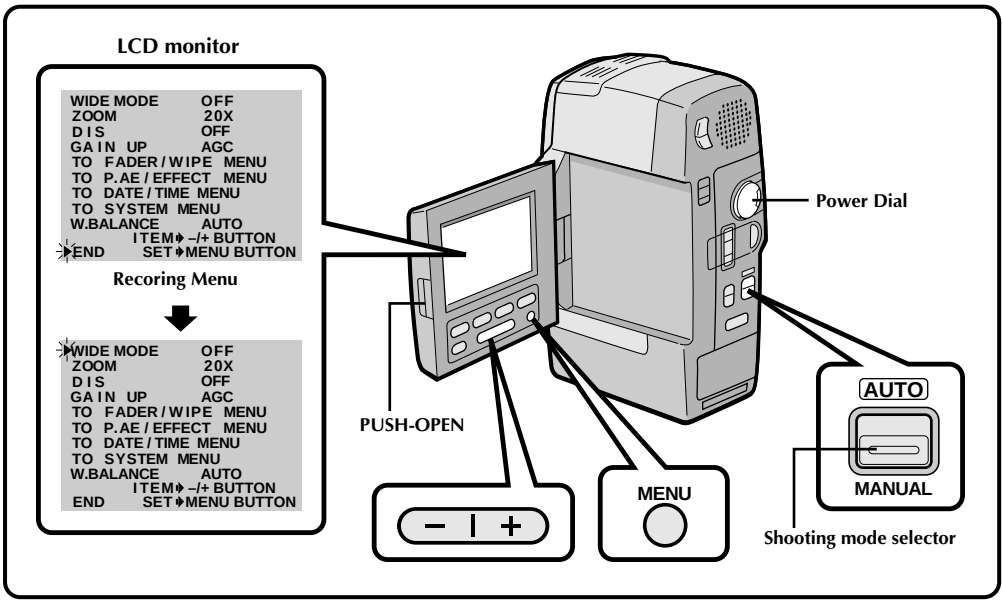

1 OPEN LCD MONITOR

First press **PUSH-OPEN** button and open the LCD monitor fully.

- The LCD monitor turns on/off automatically when it is opened/closed while the Power Dial is set to "REC".
- The LCD monitor can be tilted upward up to 180 degrees and downward up to 90 degrees.

2 SELECT OPERATION MODE

Set the Power Dial to "REC" by pressing down the lock button located on the dial and setting the shooting mode selector to "MANUAL".

3 ACCESS RECORDING MENU

Press **MENU**. The Recording Menu appears in the LCD monitor.

4 SELECT FUNCTION

Place the pointer next to the desired function by pressing the **–/+** button, then press **MENU**. The pointer stops blinking, indicating that the function has been selected.

5 SET FUNCTION PARAMETERS

Cycle the available settings of the selected function by pressing the **+/–** button. Stop when the one you need is displayed. Then press MENU and the pointer automatically moves to "END".

- To set the parameters for a different function, repeat steps **4** and **5**.

6 CLOSE RECORDING MENU

Press **MENU**. Selection is complete and the menu disappears.

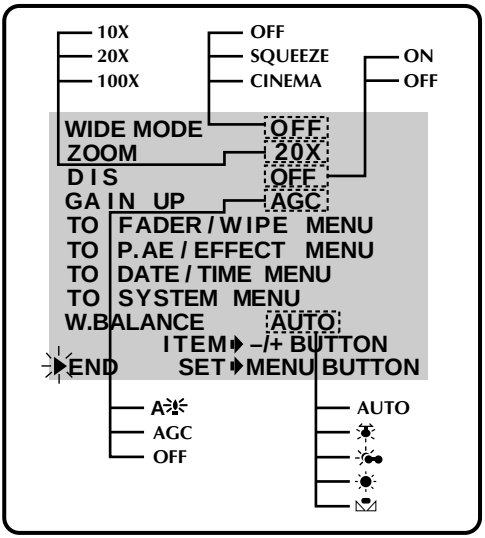

WIDE MODE

This recording mode is compatible with wide-screen TVs (16:9 aspect ratio). When using this mode, please refer to your wide-screen TV's instruction manual.

SQUEEZE–For playback on TVs with an aspect ratio of 16:9. Naturally expands the image to fit the screen without distortion. W appears in the LCD monitor. During playback/recording on 4:3 TVs/LCD monitors, the image is elongated vertically.
CINEMA–Inserts black bands at the top and bottom of the screen. During playback on wide-screen TVs, the black bands at the top and bottom of the screen are cut and the screen ratio becomes 16:9. During playback/recording on 4:3 TVs/LCD monitor, black bands are inserted at the top and bottom of the screen and the image appears like a letterboxed 16:9 movie.
OFF–Select "OFF" when you don't want to use either of the above modes. *During Full-Auto operation, both Squeeze and Cinema modes are unusable.

A discriminating signal is automatically recorded when you select either "SQUEEZE" or "CINEMA" for recording. If your wide TV has the automatic discriminating function, connect an S-Video cable between S2 connector on the TV and the S-Video output connector on the Docking Station. During playback, the image is naturally expanded to fit the wide screen, with no proportional distortion.
If your wide screen TV has no S2 connector, automatic signal discrimination can not be performed, and it should be done manually.

NOTES:

- *When playing back through a video cassette recorder, or to a wide-screen TV, that doesn't have the automatic discriminating function, change the setting on the TV manually.*
- *When playing back a tape recorded in Squeeze and Cinema, Squeeze cannot be distinguished from Cinema during fast-forward or rewind.*

DIS (Digital Image Stabilizer)

When recording while holding the camcorder in your hand, or when shooting a subject with little or no contrast, subtle hand movements will cause shakiness in the recorded image.

ON–Compensates for relatively small shakes that occur when shooting close up. "" appears in the LCD monitor during recording. *This function is usable when the shooting mode selector is set to "MANUAL".
OFF–When shooting with the camcorder in a fixed position or on a tripod, set the Stabilizer to "OFF". If you leave it on and then move or turn the camera to follow a moving subject, unnecessary compensation occurs and this can result in an unnatural recorded image.

NOTES:

- *The Stabilizer cannot compensate for drastic hand movements while shooting.*
- *The Stabilizer will not work when certain P.AE/ Effects (Classic Film, Strobe, Slow 1, 2 ☞ pg. 41) and Fade/Wipe Effects (Picture Wipe/ Dissolve ☞ pg. 36) are activated. The "" indicator appears blinking in the LCD monitor.*

ZOOM Magnification

You can select 10x, 20x, or 100x zoom magnifications.

10x–Optical zoom that does not degrade the quality of the recording.
20x–Electronic processing (Digital zoom) that lets you get closer up.
100x–Electronically-processed images at 100-times magnification.

NOTE:

Digital zoom (20x and 100x) cannot be used while the Video Echo effect (☞ pg. 41), the Picture Wipe/ Dissolve function (☞ pg. 36) or the 5SD mode (☞ pg. 28) are activated.

GAIN UP

Bright, natural recordings can be taken even in areas with low or poor lighting.

A–The shutter speed is automatically adjusted (1/25 — 1/200 sec.). Shooting a subject in low or poor lighting at 1/25 sec. shutter speed provides a brighter image than in the AGC mode, but the subject's movements are not smooth nor natural.
OFF–Select this setting when lighting is not a problem.
AGC–This is the factory setting, and is automatically activated during Auto operation. The overall appearance is jagged, but the image is bright and the movements are more natural than in "**A**" mode.

System Menu

The System Menu allows you to set the following functions: *Scene, Beep/Tally, Wind Cut, Sound Mode, ID numbers, and Photo Frame.*

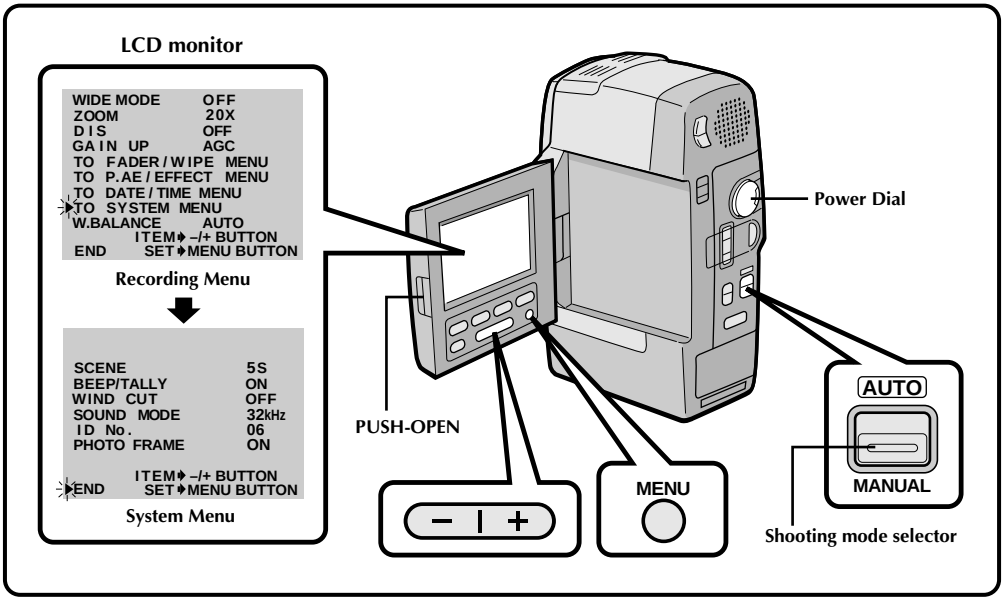

1 OPEN LCD MONITOR

First press **PUSH-OPEN** switch and open the LCD monitor fully.

- The LCD monitor turns on/off automatically when it is opened/closed while the Power Dial is set to "REC".
- The LCD monitor can be tilted upward up to 180 degrees and downward up to 90 degrees.

2 SELECT OPERATION MODE

Set the Power Dial to "REC" by pressing down the lock button located on the dial and setting the shooting mode selector to "MANUAL".

3 ACCESS RECORDING MENU

Press **MENU**. The Recording Menu appears in the LCD monitor.

4 ACCESS SYSTEM MENU

Place the pointer next to "TO SYSTEM MENU" by pressing the **–/+** button, then press **MENU**. The System Menu appears in the LCD monitor.

5 SELECT FUNCTION

Place the pointer next to the desired function by pressing the **–/+** button, then press **MENU**. The pointer stops blinking, indicating that the function has been selected.

6 SET FUNCTION PARAMETERS

Press the **–/+** button to cycle through the available settings for the selected function, and stop when the desired setting appears. Then press **MENU**, and the pointer automatically moves to "END".

- To set the parameters for a different function, repeat steps **5** and **6**.

7 CLOSE SYSTEM MENU

Press **MENU** twice. Setting is complete and the System Menu disappears.

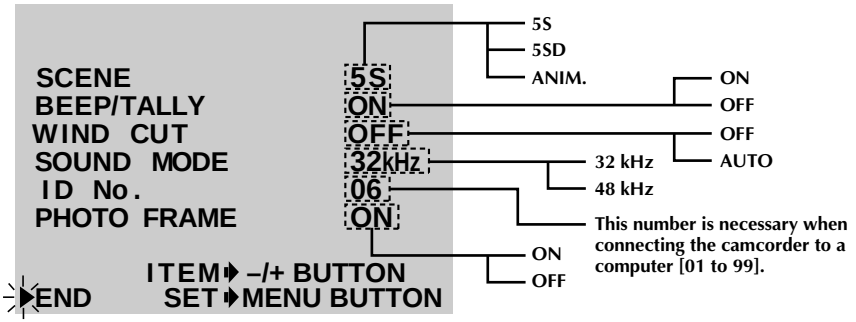

SCENE (5-Second Mode) (☞ pg. 28)

5S–Pressing **RECORDING START/STOP** allows you to take a 5-second "clip". Press repeatedly for a succession of short recordings.
5SD–If you record a 5-second clip within 5 minutes after the previous one, the end of the old scene dissolves and is replaced by the new scene over a 2-second period.
ANIM. (Animation)–Each time you press **RECORDING START/STOP**, a 1/8-second recording is taken. By using an inanimate object and changing its position between shots, you can record the subject as though it's moving.
Animation is not available in the LP mode. If you tried to record in the LP mode after setting ANIM., the recording mode indicator "LP" begins to blink, and recording goes on in the SP mode.

NOTE:

During use of SCENE effect, focus (☞ pg. 46) and exposure control (☞ pg. 47) enter Full Auto operation.

BEEP/TALLY

The beep sounds when the power is turned on or off, and at the beginning and end of recording. Tally lamp lights up during recording.
Shutter sound is heard when pressing the **SNAPSHOT** button.

ON–To activate the beep/shutter sounds and tally lamp.
OFF–To turn off the beep/shutter sounds and tally lamp. Even though not heard while shooting, shutter sound is recorded on the tape.

NOTE:

Beep is automatically turned on during Full Auto operation.

WIND CUT

When activated, this mode helps cut down on noise created by wind.

AUTO–When shooting in high winds, noise is automatically reduced.
- "" appears in the LCD monitor.
- The quality of the sound will change. This is normal.

OFF–This function is disabled.

NOTE:

The Wind Cut mode is disabled during Full Auto operation.

SOUND

Sound signals can be sampled at 32 kHz or 48 kHz.

32 kHz–The camcorder is factory-preset for 32 kHz. This setting enables recording of stereo sound on four separate channels, and is recommended for use when performing Audio Dubbing.
48 kHz– This setting enables recording of stereo sound on two separate channels. *A tape recorded at 48 kHz cannot be used for Audio Dubbing.

PHOTO FRAME

The snapshot function (☞ pg. 26) has two types of photo effects; with frame and without frame.

ON–*When engaged during recording, there will be a momentary camera shutter-type blackout, a shutter sound effect is recorded on the tape, and a white-bordered still image is displayed and recorded.*
OFF–When engaged during recording, a still image is displayed and recorded.

NOTE:

Photo Frame can not be set to OFF during Full Auto operation.

FADE/WIPE Effects

Use these to spice up the transition from one scene to the next. You can also vary transitions from scene to scene.

Select any one effect from the Fader/Wipe Menu. To use effects that don't appear in the menu, exchange them (☞ pg. 38, 39).

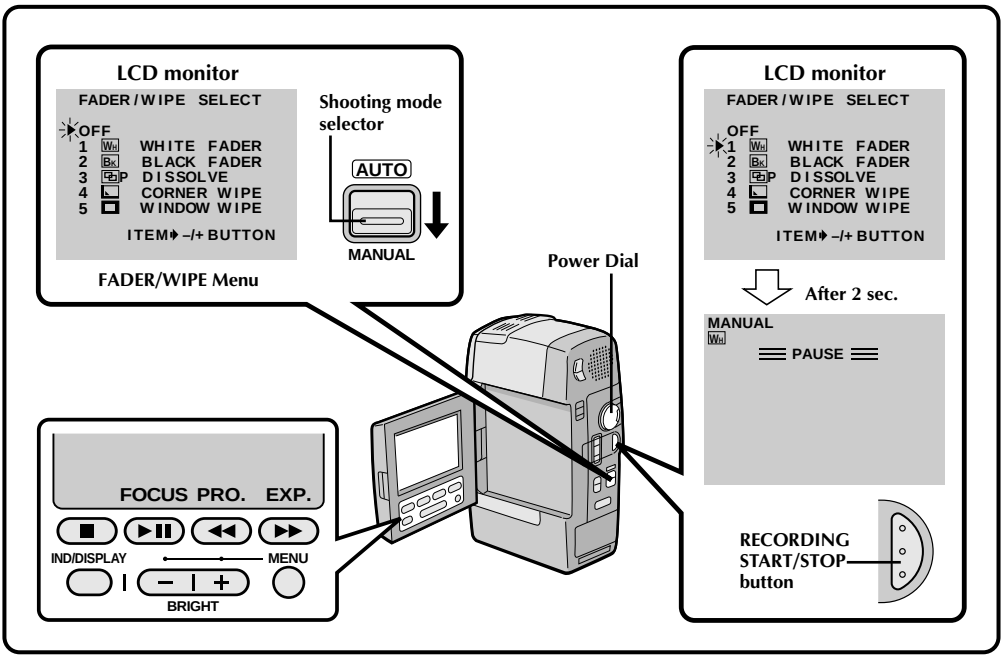

1 SELECT OPERATION MODE

First make sure the LCD monitor is open fully. Turn the Power Dial to "REC" while pressing down the lock button located on the dial, and set the shooting mode selector to "MANUAL".

2 ACCESS FADER/WIPE MENU

Press ◀◀. The Fader/Wipe Menu appears in the LCD monitor.

3 SELECT EFFECT

Place the pointer next to the desired effect by pressing the –/+ button.

- Once you select the desired effect, the Fader/Wipe Menu disappears and the effect is activated within 2 seconds. The indicator representing the selected effect appears in the LCD monitor.

4 START RECORDING

Press **RECORDING START/STOP**. The buzzer sounds, indicating the start of recording.

5 DEACTIVATE FADE/WIPE EFFECTS

In step **3**, place the pointer next to "OFF".

NOTE:

Refer to pages 35 – 39 for Fade/Wipe effects and techniques.

NOTES:

- *When "PRO." is not displayed on the LCD monitor, FADE/WIPE Effects are not available. To make it appear, press the IND/DISPLAY button.*
- *If certain P.AE/Effects (☞ pg. 40) are activated, some Fade/Wipe Effects cannot be used. If you select a Fade/Wipe Effect that is unusable in the current situation, the indication blinks.*
- *The P.AE Effect Menu is displayed if ◀◀ is pressed twice. Press ◀◀ again to display the Fader/Wipe Menu.*
- *Beep won't sound when the shooting mode selector is set to "MANUAL" if "BEEP" is set to "OFF" in the System Menu (☞ pg. 32).*

Fades and Wipes

A scene gradually appears on a black or white screen (Fade In/Wipe In), or disappears, leaving a black or white screen (Fade Out/Wipe Out). Select Fade or Wipe at the Fader/Wipe Menu (☞ pg. 34).

Select any one effect from the Fader/Wipe Menu. To use effects that don't appear in the menu, exchange them (☞ pg. 38).

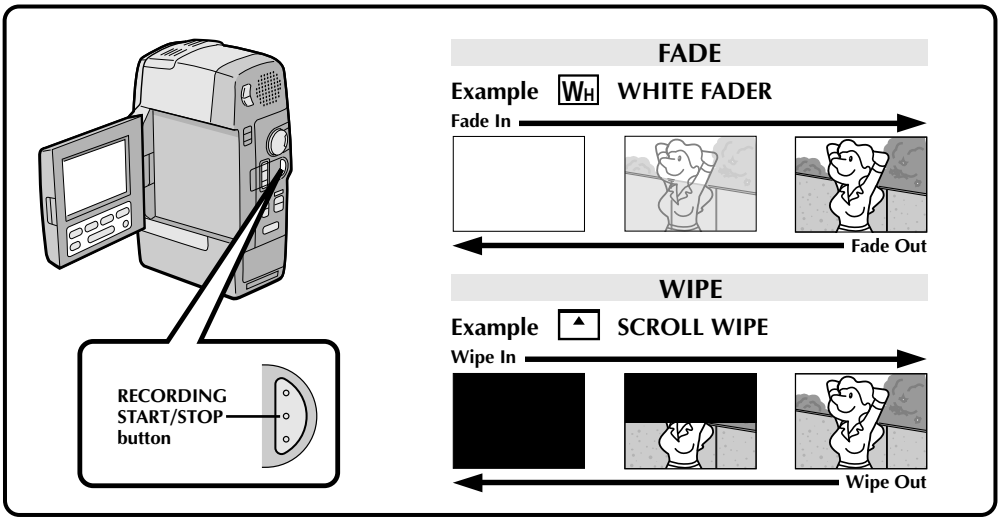

1 ACTIVATE FADE IN OR WIPE IN

Press **RECORDING START/STOP** to start recording, and the Fade In or Wipe In occurs automatically.

2 ACTIVATE FADE OUT OR WIPE OUT

When you want to stop recording the scene, press **RECORDING START/STOP**. Before the camcorder enters the Record/Standby mode, the Fade Out or Wipe Out occurs automatically.

NOTE:

*You can extend the length of a fade or wipe by pressing and holding the **RECORDING START/STOP** button.*

WHITE FADER:
Fade in or out with a white screen.

BLACK FADER:
Fade in or out with a black screen.

BLACK & WHITE FADER:
Fade in to a colour screen from a black and white screen, or fade out from colour to black and white.

MOSAIC FADER:
Fade in or out with a full-screen mosaic effect.

CORNER WIPE:
Wipe in on a black screen from the upper right to the lower left corner, or wipe out from lower left to upper right, leaving a black screen.

WINDOW WIPE:
The scene starts in the center of a black screen and wipes in toward the corners, or comes in from the corners, gradually wiping out to the center.

SLIDE WIPE:
Wipe in from right to left, or wipe out from left to right.

DOOR WIPE:
Wipe in as the two halves of a black screen open to the left and right, revealing the scene, or wipe out and the black screen reappears from left and right to cover the scene.

SCROLL WIPE:
The scene wipes in from the bottom to the top of a black screen, or wipes out from top to bottom, leaving a black screen.

SHUTTER WIPE:
Wipe in toward the center of a black screen from the top and bottom, or wipe out from the center toward the top and bottom, leaving a black screen.

CONTINUED ON NEXT PAGE

Picture Wipe/Dissolve

Combine the Picture Wipe and Dissolve functions for a professional transition effect. There are 6 Picture Wipe effects and 1 Dissolve effect. Select the Picture Wipe effect at the Fader/Wipe Menu (☞ pg. 34).

Select any one effect from the Fader/Wipe Menu. To use effects that don't appear in the menu, exchange them (☞ pg. 38).

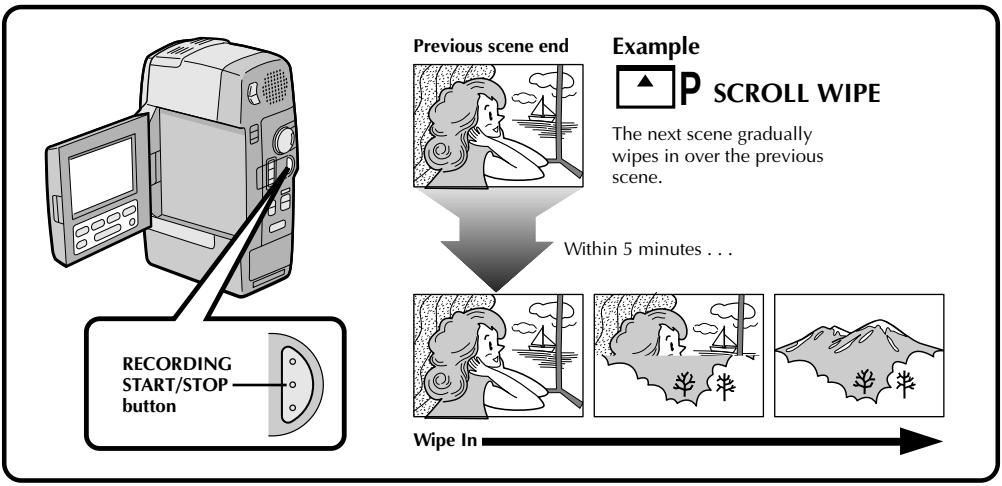

1 START RECORDING
Press **RECORDING START/STOP**.

2 ENGAGE RECORD/STANDBY MODE
Press **RECORDING START/STOP** when one scene is finished. The point at which the scene ended is stored in memory.

3 RESUME RECORDING
If you start recording a new scene within 5 minutes of the end of the previous recording (without having turned the camcorder's power off), the previous scene wipes out, revealing the new scene.

NOTES:

- *If you turn off the power after having finished recording a scene, the stored point is erased. This disables the Picture Wipe/Dissolve combination. When this happens, the Picture Wipe/Dissolve indicator blinks. Try recording again, but don't turn the power off when you're finished. The camcorder stores the end point of the last recorded scene, and you can use Picture Wipe/Dissolve between the last scene and the next one.*
- *The sound at the end of the last recorded scene is not stored.*

DISSOLVE:
The new scene gradually appears as the old one gradually disappears.

CORNER WIPE:
The new scene wipes in over the previous one from the upper right corner to the lower left corner.

WINDOW WIPE:
The next scene gradually wipes in from the center of the screen toward the corners, covering the previous scene.

SLIDE WIPE:
The next scene gradually wipes in over the previous one from right to left.

DOOR WIPE:
The previous scene wipes out from the center to the right and left, like a door being pushed open to reveal the next scene.

SCROLL WIPE:
The new scene wipes in over the last one from the bottom of the screen to the top.

SHUTTER WIPE:
The new scene wipes in over the previous one from the center toward the top and bottom of the screen.

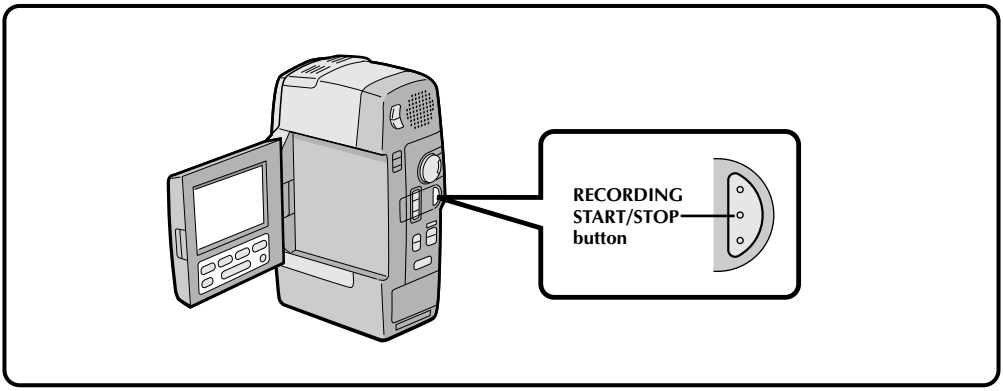

Random Variations

?R RANDOM FADER:
When this function is activated, the camcorder randomly selects the effect used in scene transition (from the Fade and Wipe effects).

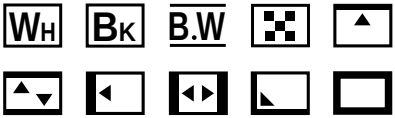

The camcorder chooses one of the fades/wipes at random.

To customize the selection of Fade and Wipe Effects used with Random Variations, refer to the procedures on pg. 38.

1 START RECORDING

Press **RECORDING START/STOP**, and "?R" appears in the LCD monitor. The camcorder does the rest, selecting an effect at random.

- The recording starts with a Fade In or Wipe In. If you press **RECORDING START/STOP** during recording, Record/Standby mode is preceded by a Fade Out or Wipe Out; when you resume recording, it begins with a Fade In or Wipe In.

NOTE:

The Picture Wipe/Dissolve feature is not available when Random Fader is activated.

Exchanging FADE/WIPE Effects

You can replace the 5 effects currently appearing in the menu with 5 others. After exchanging, the new effects appear in the Fader/Wipe Menu.

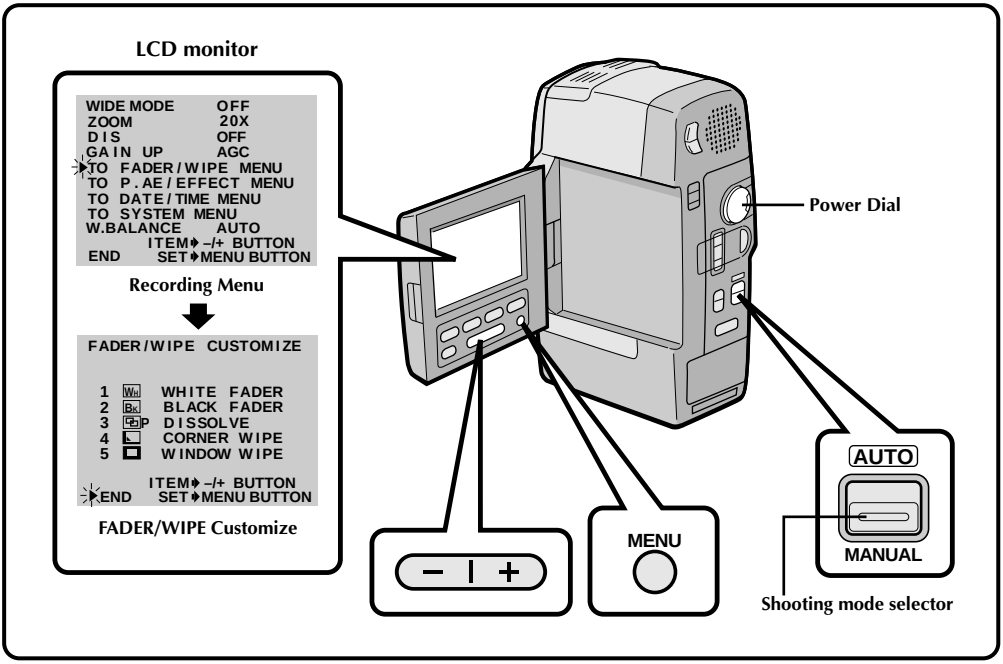

1 SELECT OPERATION MODE

First make sure the LCD monitor is open fully. Turn the Power Dial to "REC" while pressing down the lock button located on the dial, and set the shooting mode selector to "MANUAL".

2 ACCESS RECORDING MENU

Press **MENU**. The Recording Menu appears in the LCD monitor.

3 ACCESS FADER/WIPE CUSTOMIZE MENU

Place the pointer next to “TO FADER/WIPE MENU” by pressing the **–/+** button, then press **MENU**. The Fader/Wipe Customize Menu appears.

4 SELECT EFFECT TO BE REPLACED

Place the pointer next to the number of the effect you want to replace by pressing the **–/+** button, then press **MENU**. The cursor stops blinking.

5 SELECT NEW EFFECT

Cycle through the remaining effects by pressing the **–/+** button and stop when the one you want is displayed. Press **MENU**.

- The pointer automatically moves to “END”.
- To replace other effects, repeat steps **4** and **5**.

6 CLOSE MENU

Press **MENU** twice. Selection is complete, and you can use the new effects during recording (☞ pg. 34).

To use the exchanged FADE/WIPE effects, refer to the following pages:

- Fades and Wipes ..... ☞ pg. 35
- Picture Wipe/Dissolve ..... ☞ pg. 36
- Random Variations ..... ☞ pg. 37

Refer to page 34 on using the exchanged effects.

18 scene transitions

pg. 35 Fades and Wipes

WHITE FADER → BLACK FADER → BLACK & WHITE FADER

MOSAIC FADER → CORNER WIPE → WINDOW WIPE

SLIDE WIPE → DOOR WIPE → SCROLL WIPE

SHUTTER WIPE

pg. 36 Picture Wipe/Dissolve

DISSOLVE → CORNER WIPE → WINDOW WIPE

SLIDE WIPE → DOOR WIPE → SCROLL WIPE

SHUTTER WIPE

pg. 37 Random Variations

RANDOM FADER

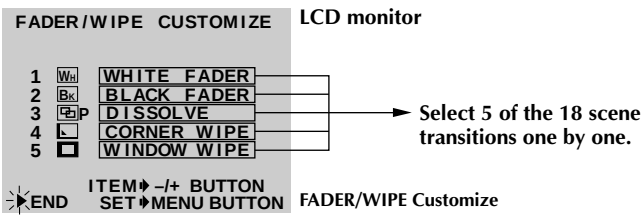

LCD monitor

Select 5 of the 18 scene transitions one by one.

FADER/WIPE Customize

P.AE/Effects

You can choose any one of the effects from the P.AE/Effects Menu. In addition, you can exchange 5 of the 12 options that appear for other available effects (☞ pg. 42).

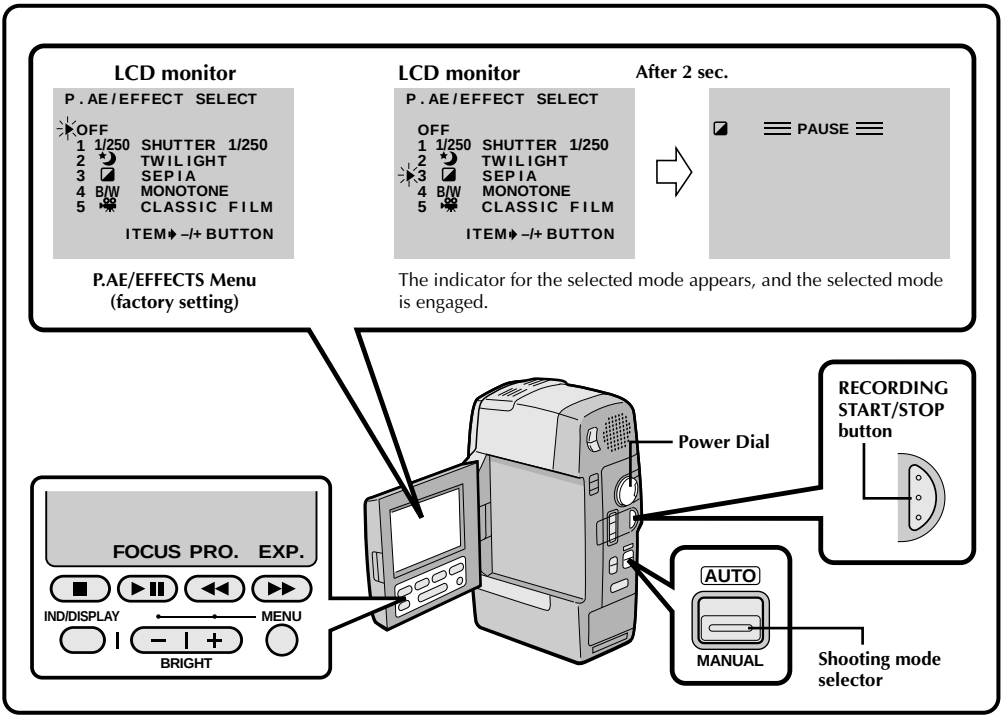

1 SELECT OPERATION MODE

First make sure the LCD monitor is open fully. Turn the Power Dial to "REC" while pressing down the lock button located on the dial, and set the shooting mode selector to "MANUAL".

2 ACCESS P.AE/EFFECT SELECT MENU

Press ◀◀ twice. The P.AE/Effects Menu appears in the LCD monitor.

3 SELECT EFFECT

Place the pointer next to the desired effect by pressing the –/+ button.

- Approximately 2 seconds after you place the pointer, the P.AE/Effects Menu disappears and the selected mode is activated. The name or symbol of the selected mode appears in the LCD monitor.

4 DISABLE P.AE/EFFECT

To turn off the selected effect, re-access the P.AE/Effects Menu and place the pointer next to "OFF" by pressing the –/+ button.

NOTES:

- *When "PRO." is not displayed on the LCD monitor, P.AE/Effects is not available. To make it appear, press the IND/DISPLAY button.*
- *If certain Fades or Wipes (☞ pg. 34 – 39) are activated, some P.AE/Effects cannot be used, If you select a P.AE/Effect that is unusable in the current situation, the effect's name or symbol begins flashing.*

B/W MONOTONE √

Like classic black and white films, your footage is shot in B/W. Used together with the Wide Cinema function, it enhances the "classic film" effect.

SEPIA √

Recorded scenes have a brownish tint like old photos. Combine this with the Cinema mode for a classic look.

CLASSIC FILM √

Gives recorded scenes a strobe effect.

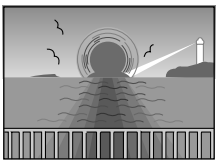

TWILIGHT √

Makes evening scenes look more natural.

VIDEO ECHO

Adds a "ghost" to the subject, giving your recording a "fantasy" feeling.

STROBE

Your recording looks like a series of consecutive snapshots.

SHUTTER (Variable Shutter Speed)

1/50–The shutter speed is fixed at 1/50th of a second.
1/100–The shutter speed is fixed at 1/100th of a second.
1/250 (factory preset), 1/500–These settings allow fast-moving images to be captured one frame at a time, for vivid, stable slow-motion playback. The faster the shutter speed, the darker the picture becomes. Use the shutter function under good lighting conditions.

** **Checked "√"effects are factory preset.**
To use other effects, refer to "Exchanging P.AE/ Effects" on page 42.

SLOW (Slow Shutter)

You can light dark subjects or areas even brighter than they would be under good natural lighting.

1 x 4 = 4 times sensitivity (shutter speed 1/12.5 sec.)

2 x 10 = 10 times sensitivity (shutter speed 1/5 sec.)

NOTES:

- *When using Slow, the image takes on a strobe-like effect.*
- *Use Slow only in dark areas.*
- *The Manual Focus indication may appear and flash when Slow is in use.*
- *If the image is out of focus, adjust manually. It is also recommended that you use a tripod, if possible.*

Exchanging P.AE/Effects

You can replace 5 of the effects that appear in the menu with 5 others.
Refer to page 40 on using the exchanged effects.

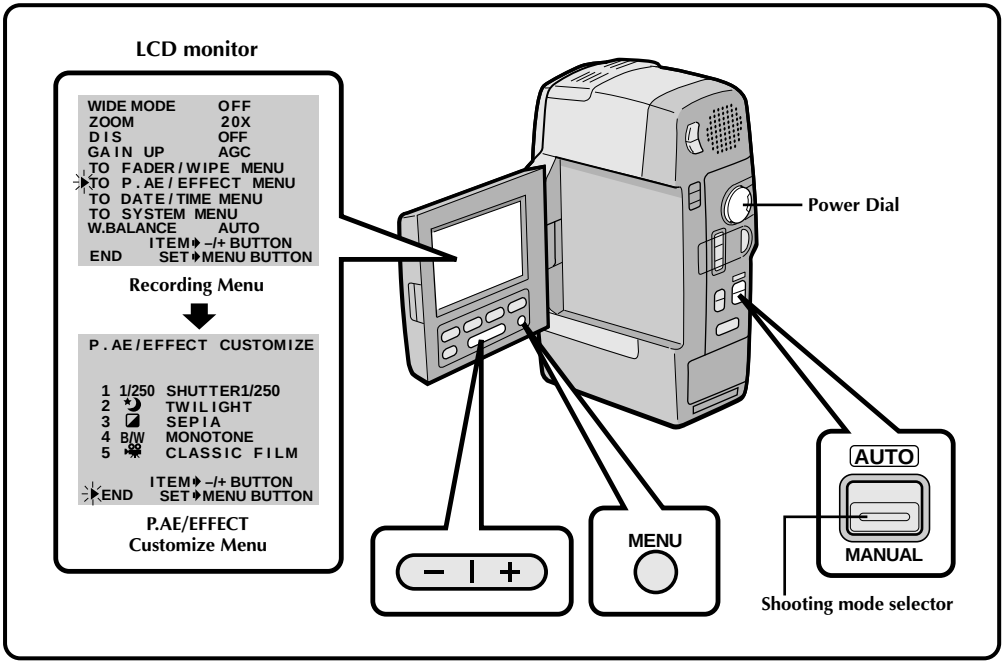

1 SELECT MODE

First make sure the LCD monitor is open fully. Turn the Power Dial to "REC" while pressing down the lock button located on the dial, and set the shooting mode selector to "MANUAL".

2 ACCESS RECORDING MENU

Press **MENU**. The Recording Menu appears in the LCD monitor.

3 ACCESS P.AE/EFFECT CUSTOMIZE MENU

Place the pointer next to "TO P.AE/EFFECT MENU" by pressing the **–/+** button. Then press **MENU** and the P.AE/Effect Customize Menu appears in the LCD monitor

4 SELECT EFFECT TO BE REPLACED

Place the pointer next to the number of the effect you want to replace by pressing the **–/+** button, then press **MENU**. The pointer stops blinking.

5 SELECT NEW EFFECT

Cycle through the remaining effects by pressing the **–/+** button and stop when the one you want is displayed. Press **MENU**.

- The pointer automatically moves to "END".
- To replace other effects, repeat steps **4** and **5**.

6 CLOSE MENU

Press **MENU** twice. Selection is finished, and you can use the new effect(s) in recording (☞ pg. 40).

Displaying The Date And Time During Recording

You must first set the date and time (see “Date/Time Settings” ☞ pg. 12). Set “DISPLAY” to “ON” in the Date/Time Menu. The Date/Time appears in the LCD monitor if the Shooting mode selector is set to “MANUAL”. The Date/Time is always displayed in the LCD monitor when the Shooting mode selector is set to “AUTO”.

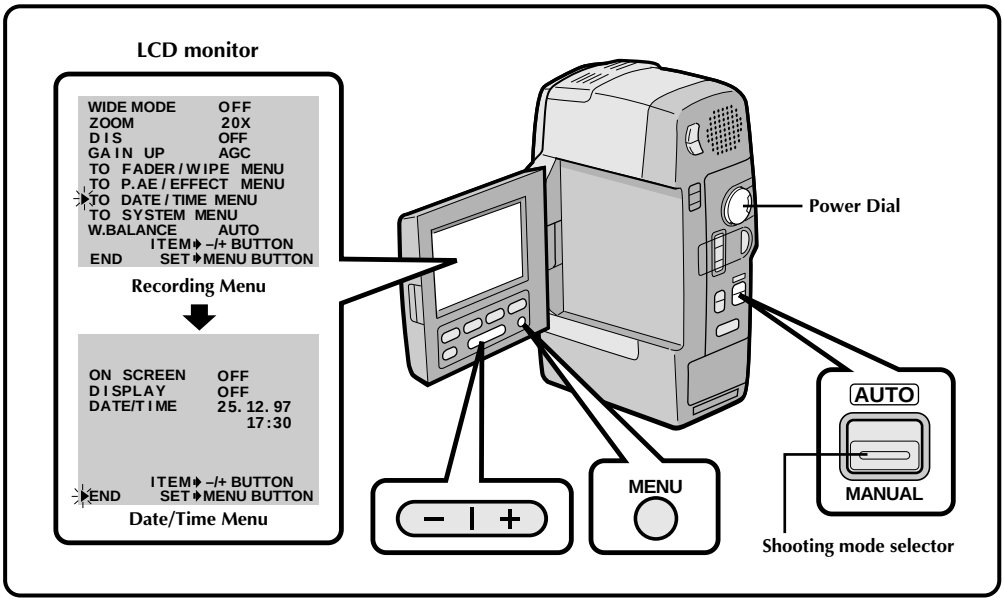

1 SELECT OPERATION MODE

First make sure the LCD monitor is open fully. Turn the Power Dial to "REC" while pressing down the lock button located on the dial, and set the shooting mode selector to "MANUAL".

2 ACCESS RECORDING MENU

Press **MENU**. The Recording Menu appears in the LCD monitor.

3 ACCESS DATE/TIME MENU

Place the pointer next to "TO DATE/TIME MENU" by pressing the **–/+** button. Press toward "**+**" to move up and toward "**–**" to move down. Press **MENU** and the Date/Time Menu appears in the LCD monitor.

4 SELECT FUNCTION

Place the pointer next to "DISPLAY" by pressing the **–/+** button, then press **MENU**. The cursor stops blinking, indicating that the function has been selected.

5 SET FUNCTION PARAMETERS

Cycle through the available settings of the selected functions by pressing the **–/+** button and stop when the one you want is displayed. Then press **MENU** and the pointer automatically moves to “END”.

6 CLOSE RECORDING MENU

Press **MENU** twice. Selection is complete and the menu disappears.

NOTES:

- *Connect the camcorder to a TV and set “ON SCREEN” to “ON” in the Date/Time Menu. The display appears on the connected TV when the camcorder is in Record/Standby mode.*
- *The Indicator/Display function overrides these settings. If you have set the ON SCREEN or DISPLAY function and the indication does not appear on the display then press the IND/DISPLAY button (☞ pg. 23).*

White Balance Adjustment

A term that refers to the correctness of colour reproduction under various lighting. If the white balance is correct, all other colours will be accurately reproduced.
The white balance is usually adjusted automatically. However, the more advanced camcorder operator would prefer to control this function manually and achieve a more professional colour/tint reproduction.

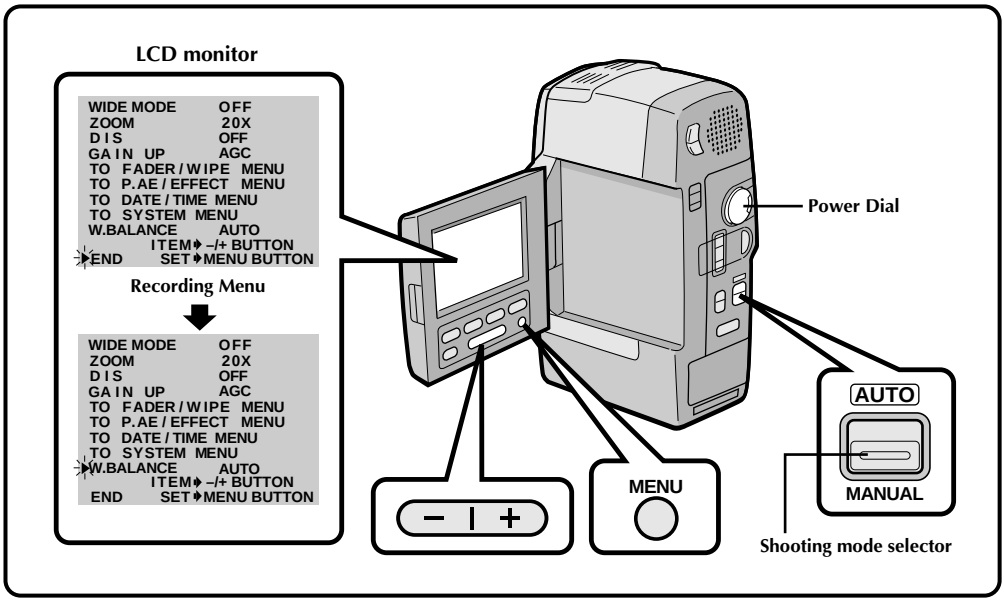

1 SELECT MODE

First make sure the LCD monitor is open fully. Turn the Power Dial to "REC" while pressing down the lock button located on the dial, and set the shooting mode selector to "MANUAL".

2 ACCESS RECORDING MENU

Press **MENU**. The Recording Menu appears in the LCD monitor.

3 ACCESS WHITE BALANCE MENU

Place the pointer next to "W.BALANCE" by pressing the **–/+** button. Press "**+**" to move up and "**–**" to move down. Then press **MENU**. The pointer stops blinking, indicating that the function has been selected.

AUTO–The white balance is adjusted automatically. This is the factory preset position.

"☀"– When using a video light or other similar type of lighting.

"⛅"–When shooting outdoors on a cloudy day.

"☀"– When shooting outdoors on a sunny day.

" "–When shooting with the white balance already having been set on the subject (☞ pg. 45).

4 SET FUNCTION PARAMETERS

Cycle through the available settings of the selected functions by pressing the **–/+** button, and stop when the one you want is displayed. Then press **MENU** and the pointer automatically moves to "END".

5 CLOSE RECORDING MENU

Press **MENU** again. Selection is complete and the menu disappears.

To Return To Automatic White Balance . . .

..... select "AUTO" in step **3**. Or set the shooting mode selector to "AUTO".

NOTE:

White balance cannot be used when P.AE/Effects Sepia or Monotone are activated.

Manual White Balance Operation

If the camera is operating in manual mode, perform a Manual White Balance when shooting under various types of lighting

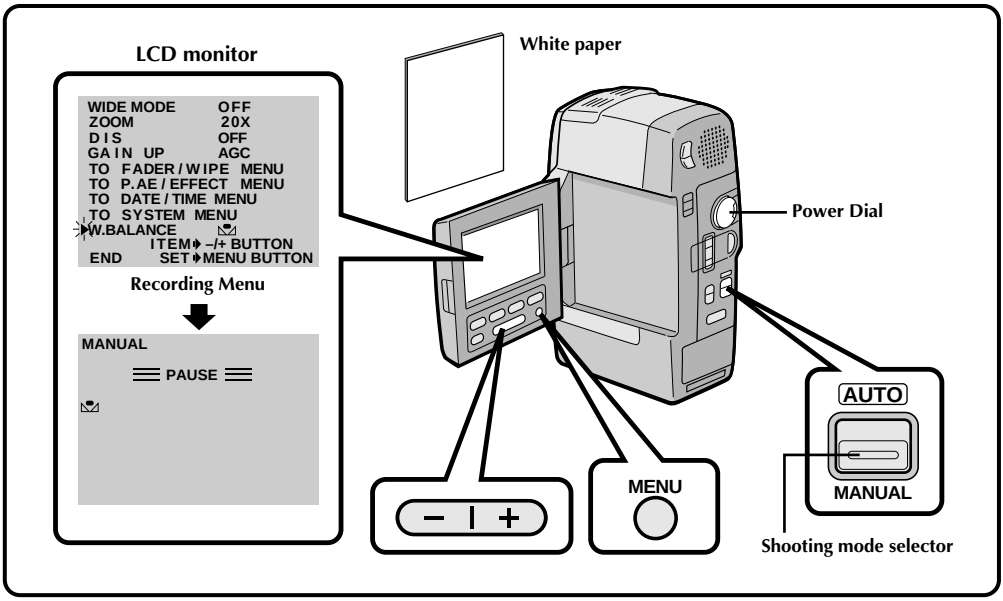

1 **SELECT MODE**

Follow steps **1** through **4** of the white balance adjustment (☞ pg. 44), select "W.BAL". "W.BAL" begins blinking.

2 **SET MANUAL WHITE BALANCE**

Hold a sheet of plain white paper in front of the subject. Adjust zoom or position yourself so that the white paper fills the screen.

3 **ENTER SETTING**

Press and hold "**–**" or "**+**". When the W.BAL begins blinking quickly, release the button.

- When the setting is completed, the W.BAL stops blinking and ► moves to "END".

4 **EXIT RECORDING MENU**

Press **MENU**. The Manual White Balance indicator W.BAL is displayed in the LCD monitor.

To Change The Tint For Recording . . .

..... In step **2**, substitute coloured paper for white. The white balance is adjusted based on the colour, changing the tint. Red paper — deeper green; blue paper — orange; yellow paper — deeper purple.

NOTES:

- *A subject can be shot under various types of lighting conditions indoors (natural, flourescent, candlelight, etc.). Because the colour temperature is different depending on the light source, the tint of the subject will differ depending on the white balance settings. Use this function for a more natural result.*
- *Once you adjust white balance during Manual White Balance operation, the setting is retained even if the power is turned off or the battery removed.*

Manual Focus Adjustment

The recorder, in most cases, adjusts the focus from 10 cm to infinity automatically. However, when focusing is difficult or when the subject is not in the middle of the LCD monitor, adjust the focus manually.

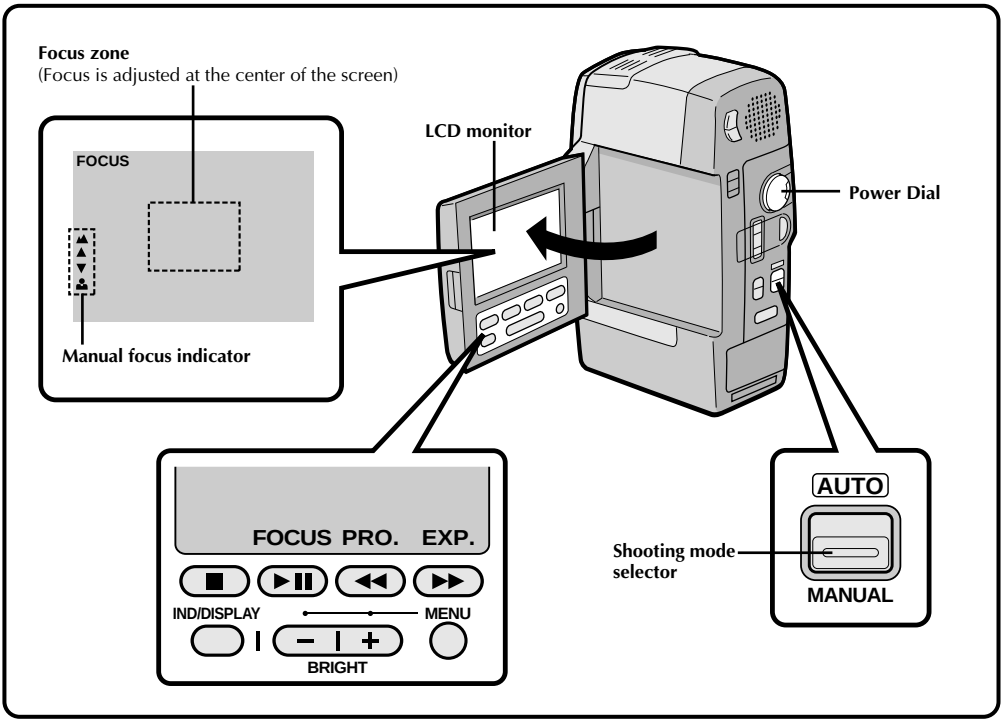

1 SELECT MODE

First make sure the LCD monitor is open fully. Turn the Power Dial to "REC" while pressing down the lock button located on the dial, and set the shooting mode selector to "MANUAL".

2 ACCESS MANUAL FOCUS DISPLAY

Press ►II. "FOCUS" is displayed in the LCD monitor. The focus is locked at this point.

3 ADJUST FOCUS

Press "+" to adjust to faraway targets, or "–" to focus on closer targets.

- When the focus reaches its near or far limit, the "▲" or "▲" will begin blinking.
- When focus cannot be adjusted manually, try zooming in or out, then try the manual focus adjustment again.

To Change To Auto Focus . . .

..... Press ►II. The manual focus indicators disappear. Or set the shooting mode selector to "AUTO".

NOTES:

- *When "FOCUS" is not displayed on the LCD monitor, Manual Focus Adjustment is not available. To make it appear, press the IND/DISPLAY button.*
- *Manual focus is recommended in the following situations:*
  - *When shooting a flat wall, a blue sky or an object with little or no contrast.*
  - *When wire or other obstacles come between the camcorder and the subject.*
  - *When shooting in dark places.*
  - *When shooting objects with a detailed design or pattern.*
  - *When shooting under flourescent or flickering lighting.*

Exposure Control

Usually this is adjusted automatically. However, when the background is too bright or too dark in comparison with the subject, the exposure could be corrected manually.

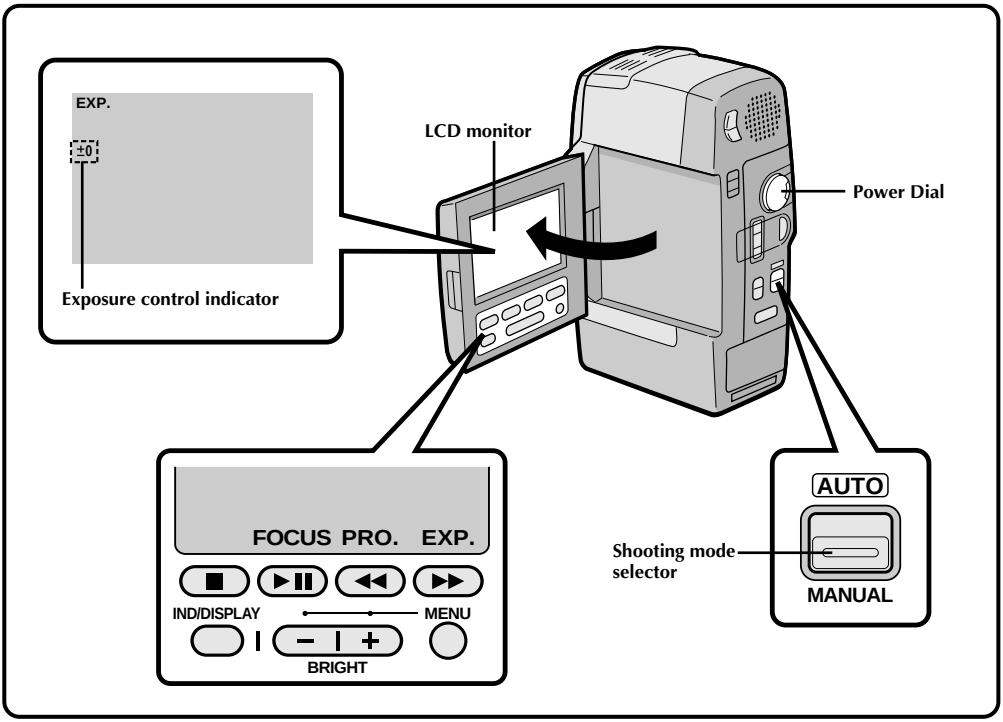

1 SELECT MODE

First make sure the LCD monitor is open fully. Turn the Power Dial to "REC" while pressing down the lock button located on the dial, and set the shooting mode selector to "MANUAL".

2 ADJUST EXPOSURE

Press ▶▶. "EXP." and the Exposure Control indicator are displayed in the LCD monitor.

- The adjustment range is from –6 to +6. Press "+" to brighten the image, or "–" to darken it.

To Return To Automatic Exposure Control . . .

..... Press ▶▶ quickly. The Exposure Control indicator disappears. Or set the shooting mode selector to "AUTO".

NOTES:

- *When "EXP." is not displayed on the LCD monitor, Manual Exposure Control is not available. To make it appear, press the IND/DISPLAY button.*
- *Manual exposure adjustment is recommended in the following situations:*
  - *When shooting using reverse lighting or when the background is too bright.*
  - *When shooting on a reflective natural background such as at the beach or when skiing.*
  - *When the background is overly dark or the subject light.*

Brightness control of the LCD monitor

To adjust the brightness of the LCD monitor, press **BRIGHT** on the LCD monitor (☞ pg. 23). Note that the actual recorded image's brightness can not be changed by pressing this button.

Iris Lock

Use this function when shooting a moving subject, when zooming, when the subject changes its distance (thus its size in the LCD monitor), or when you want to lock the brightness level.

When the subject is close, keep the iris locked. Even when the subject moves away from you, the image will not darken.

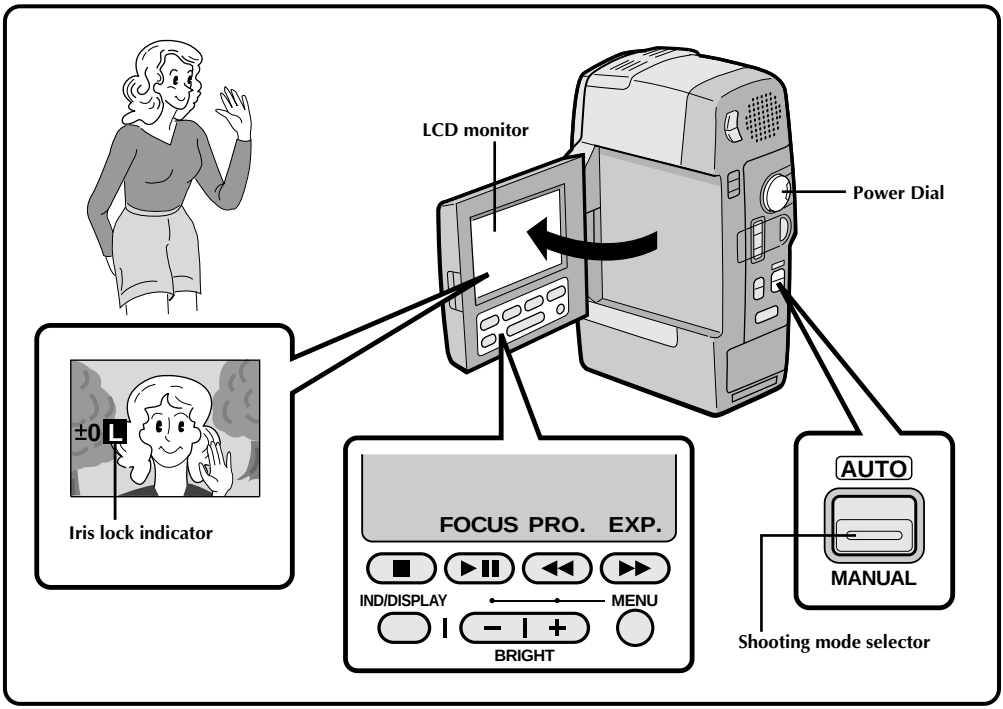

1 SELECT MODE

First make sure the LCD monitor is open fully. Turn the Power Dial to "REC" while pressing down the lock button located on the dial, and set the shooting mode selector to "MANUAL".

2 CENTER SUBJECT, LOCK IRIS

Press ▶▶. "EXP." is displayed in the LCD monitor. Adjust zoom so that the subject fills the LCD monitor, then press and hold ▶▶ for about 2 seconds. The exposure setting display and "L" appear, indicating that the iris is locked.

To Return To Automatic Iris Control . . .

..... Press ▶▶. The Exposure Control indicator and "L" disappear. Or set the shooting mode selector to "AUTO".

NOTES:

Iris lock is recommended in the following situations:

- *When shooting on a reflective natural background such as at the beach or when skiing.*
- *When shooting objects under a spotlight.*
- *When the subject is backing away.*
- *When zooming.*

*** Locking the exposure control and the iris***

After step **1**, adjust the exposure using the **–/+** button. Then lock the iris in step **2**. For automatic locking, press ▶▶ quickly. The iris becomes automatic after about 2 seconds.

Iris

Works like the pupil of the human eye. In a well-lighted environment, the human pupil contracts to keep too much light from enterintg. In low lighting, the pupil dilates to allow more light in.

You can watch what you've recorded in the LCD monitor.

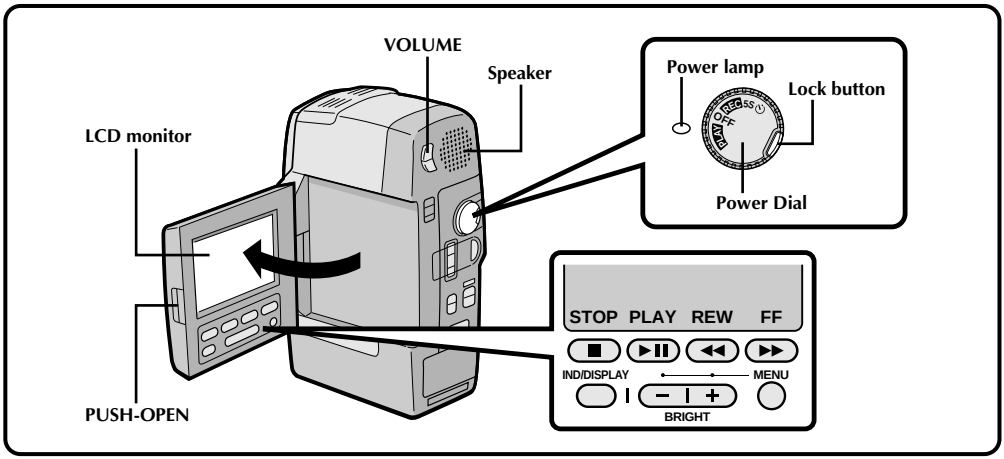

1 OPEN LCD MONITOR
Press **PUSH-OPEN** to open the LCD monitor.

2 SELECT OPERATION MODE
Turn the Power Dial to "PLAY" while pressing down the lock button located on the dial.

3 REWIND TAPE
Press ◀◀. ◀◀ is displayed on the LCD monitor. If you rewind all the way to the end of the tape, it stops automatically.

4 VIEWING RECORDING
Press ▶II. ▶II is displayed on the LCD monitor and the recorded footage can be viewed.

5 END PLAYBACK
Press ■. Set the Power Dial to "OFF".

- When turning to "OFF", it is not necessary to press down the lock button.

To Perform High-Speed Search . . .

..... press ◀◀ or ▶▶ after pressing ▶II. The tape will move at approximately 9 times the normal playback speed. Watch in the LCD monitor and, when you reach the spot you want to see, press ▶II and normal playback resumes.

Playback Sound

You can hear sound from the speaker or using headphones connected to the headphones connector during playback. To adjust the sound volume, press the **VOLUME** button. The sound volume indication is displayed in the LCD monitor. Press "**+**" to turn up the volume, or "**–**" to turn it down.

NOTES:

- *You can also perform a High-Speed Search by pressing and holding ◀◀ or ▶▶ during the PLAY mode. The search continues as long as you hold the button. Once you release it, normal playback resumes.*
- *A slight mosaic effect appears on screen during High-Speed Search. This is not a malfunction.*
- *The sound is not available during High-Speed Search.*

Still Playback

To temporarily stop playback, press ▶II. Press again to resume playback. If still playback continues for more than about 3 minutes, the camcorder's Stop mode is automatically engaged. After 5 minutes in the stop mode, the camcorder's power is automatically turned off.

Print Of Scenes

It is possible to print out recorded scenes using an optional video printer. Attach the camcorder to the Docking Station and connect the station to a video printer. Operate video printer using the LCD monitor. When connecting the station's PRINTER connector (☞ pg. 76) to the video printer's video output connector, the date and time code are not displayed in the LCD monitor. If you want to print out a scene with its date, connect the video printer's video output connector to TV and operate the video printer using a TV monitor.

VCR/TV Connection

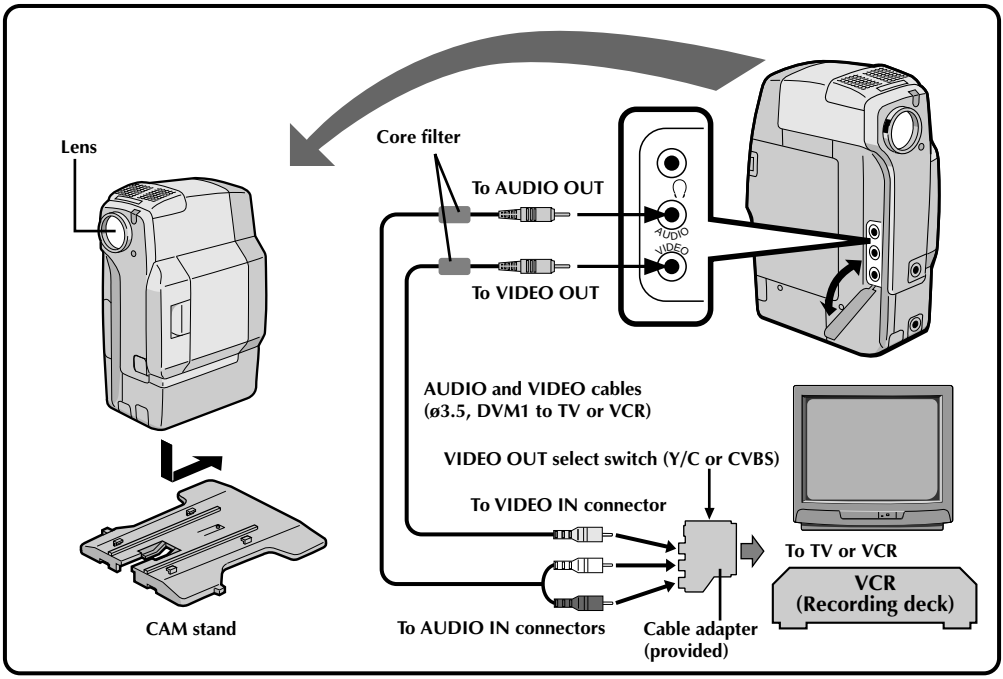

1 CONNECT CAMCORDER TO TV OR VCR

Connect as shown in the illustration.

- It is recommended to place the camcorder on the CAM stand for playback (☞ pg. 10).

2 TURN ON POWER

Turn the Power Dial to "PLAY" and turn on the TV/VCR.

3 SELECT TV'S VIDEO MODE

Set the TV to the channel or mode appropriate for video playback.

If Using A VCR . . . go to step ***4****.*
If not . . . go to step ***5****.*

4 CONNECT VCR OUTPUT TO TV INPUT

Refer to your VCR's instruction manual.

5 START PLAYBACK

Press ►II. You can watch the scenes you recorded on the TV.

6 END PLAYBACK

Press ■ and, if you're not going to continue using the camcorder, set the Power Dial to "OFF".

To choose whether or not the following displays appear on the connected TV . . .

- Date/Time, Time Code
  .... set to "ON" or "OFF" in the Playback Menu (☞ pg. 54).
- Playback Sound Mode Display
  .... set the Power Dial to "REC", and set "ON SCREEN" in the Date/Time Menu (☞ pg. 12) to "ON" or "OFF". Then set the Power Dial back to "PLAY".

NOTES:

- *When using the provided VIDEO cable (ø 3.5, DVM1 to TV or VCR) or AUDIO cable (ø 3.5, DVM1 to TV or VCR), make sure you connect the end of the cable with the core filter to the camcorder. The core filter improves performance of equipment.*
- *Before opening the cassette cover, disconnect the headphones and AUDIO/VIDEO connectors from the jacks because the cassette cover will interfere with them.*
- *For camcorders sold in the U.K., set the VIDEO OUT select switch of the Cable adapter as required:*
  Y/C: When connecting to a TV or VCR which accepts Y/C signals and uses an S-VIDEO cable.
  CVBS: When connecting to a TV or VCR which does not accept Y/C signals and uses an audio/video cable.

Docking Station Attachment

When you attach your camcorder to the Docking Station, you can add many interesting effects during playback.

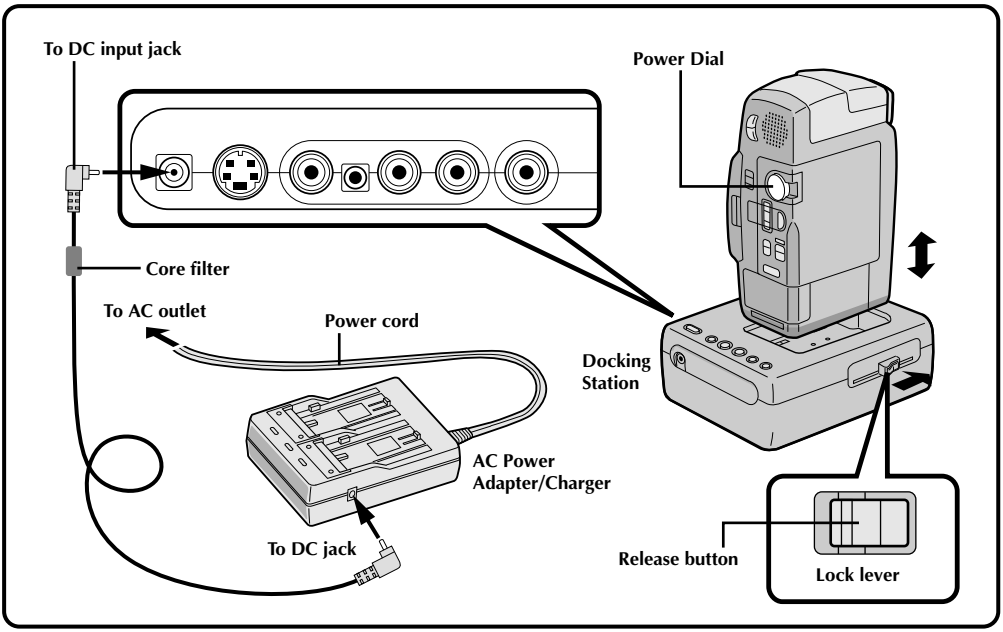

1 CONFIRM POWER-OFF STATUS
Make sure the camcorder's power is off.

2 ATTACH AND LOCKS
Press down on the camcorder and slide the Lock Lever in the direction of the arrow. The camcorder and the Docking Station are now securely attached.

- When removing the camcorder, slide the lock lever in the opposite direction of the arrow while pressing down the Release button and lift the camcorder out.

3 SUPPLY POWER
The Docking Station must be powered by the AC adapter whether the battery is in the camcorder or not.

- The Docking Station cannot function using the camcorder's battery.

4 SELECT MODE
Set the Power Dial to "PLAY".

Using The Remote Control During Playback

Once the camcorder is attached to the Docking Station, you can use the RM-V708U or RM-V710U remote control for regular playback, slow motion (approx. 1/10 speed (☞ pg. 53), Playback Zoom (☞ pg. 56), and P.AE/Effects (☞ pg. 40).

NOTE:

When using the provided DC cord, make sure you connect the end of the cable with the core filter to the Docking Station. The core filter improves performance of equipment.

TV Playback

* Please refer to your VCR and/or TV instruction manual(s) when connecting.

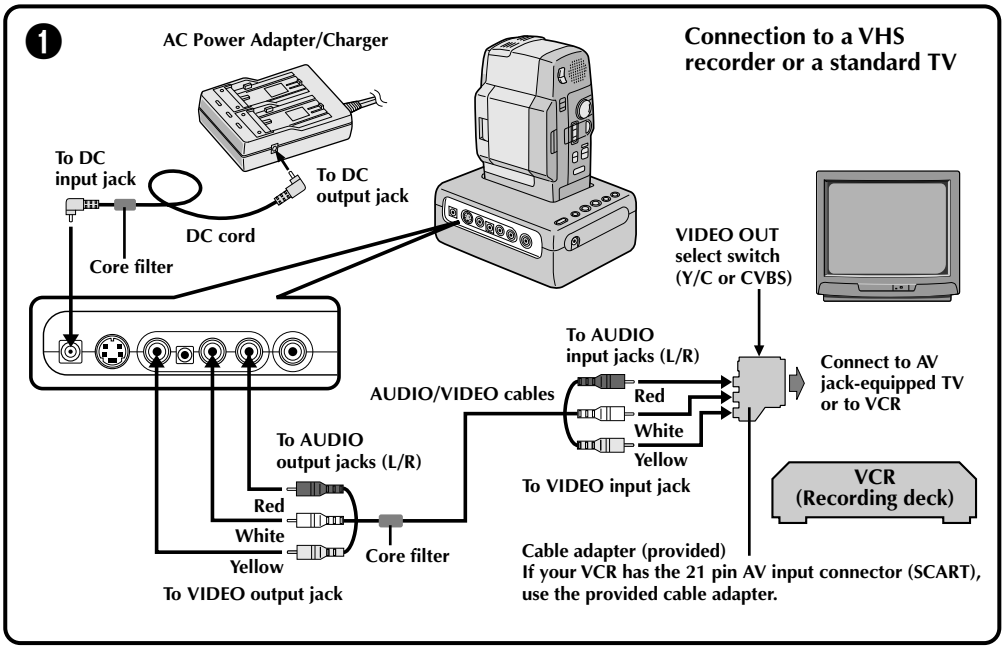

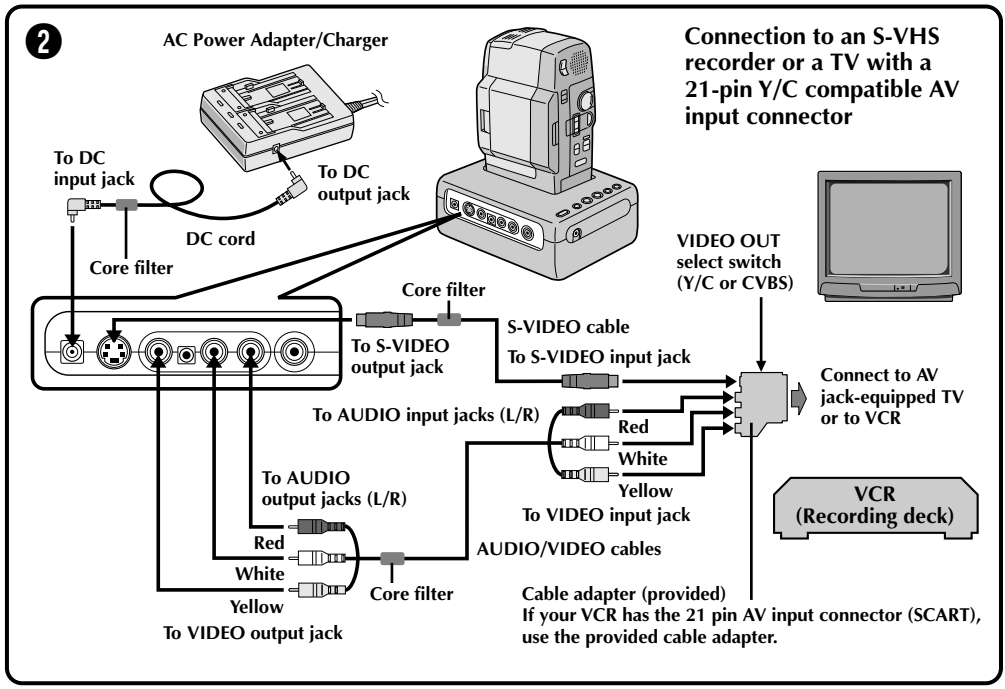

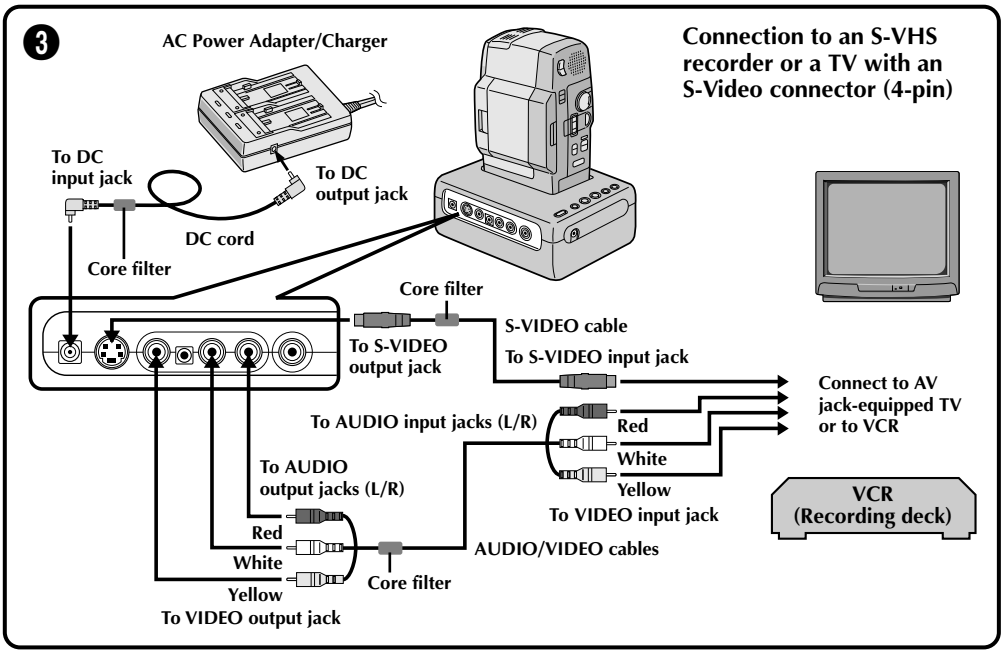

1 CONNECT DOCKING STATION TO TV OR VCR

Connect as shown in the illustration (☞ pg. 52, 53).

2 TURN ON POWER

3 SELECT TV'S VIDEO MODE

Set the TV to the channel or mode appropriate for video playback.

*If Using A VCR . . . go to step **4**.*
*If not . . . go to step **5**.*

4 CONNECT VCR OUTPUT TO TV INPUT

Refer to your VCR's instruction manual.

5 START PLAYBACK

Press play and your pre-recorded scenes will be played on your TV.

6 END PLAYBACK

Press **STOP** and, if you're not going to continue using the camcorder, set the Power Dial to "OFF".

NOTES:

- *To change from normal to slow-motion playback, press **PAUSE** at the point where you want to start playback in slow motion, then point the remote control at the Docking Station's sensor and press **SLOW** (Rewind/Forward). After playing back in slow motion for about 10 to 20 seconds, normal playback resumes. Speed is 1/10 times normal. To stop slow-motion playback in progress, press **PLAY**.*
- *During slow-motion playback, due to digital image processing, the picture may take on a mosaic effect.*
- *After **SLOW** is pressed, the still image may be displayed for a few seconds, then the screen may become blue back for a few seconds.*
- *There may be a small margin between the slow-motion playback start point you chose and the start point at which the camcorder actually begins playback in slow motion.*
- *When using the provided AUDIO/VIDEO cable (Docking Station to TV or VCR), DC cord, S-VIDEO cable or editing cable, make sure you connect the end of the cable with the core filter to the Docking Station. The core filter improves performance of equipment.*
- *Set the VIDEO OUT select switch of the connector as required:*
  Y/C: When connecting to a TV or VCR which accepts Y/C signals and uses an S-VIDEO cable.
  CVBS: When connecting to a TV or VCR which does not accept Y/C signals and uses an audio/video cable.

Playback Menu

The Playback Menu allows you to set the following functions: *Playback Sound (32 kHz, 48 kHz), Synchro Comp, Display* and *Time Code*. The following procedure applies to all except *Synchro Comp* (☞ pg. 63, 64).

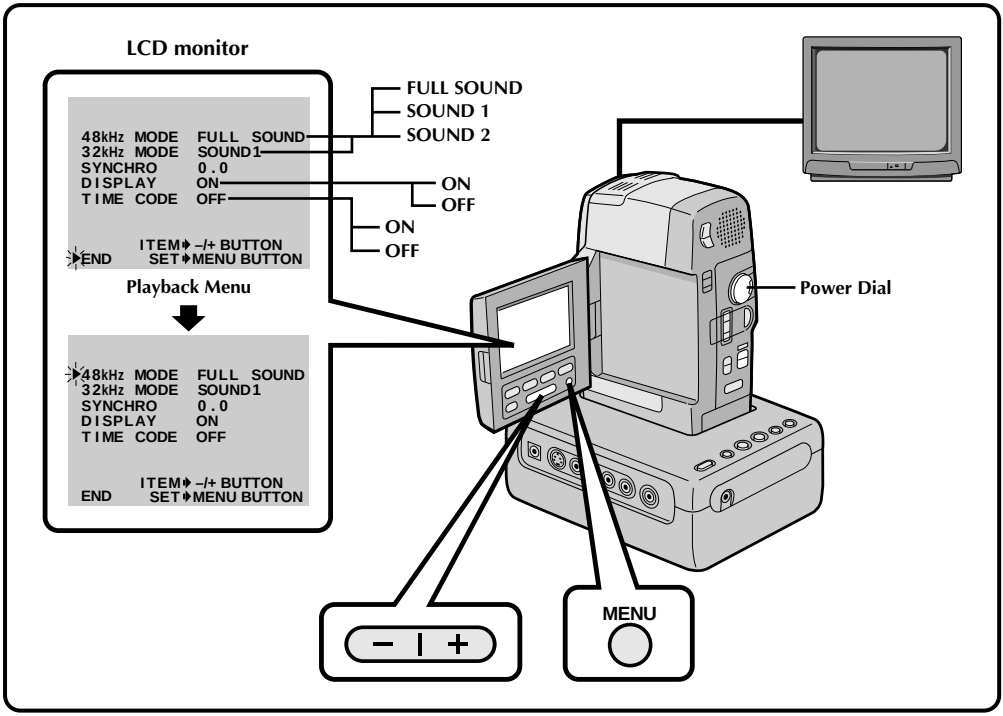

1 SELECT OPERATION MODE

First make sure the LCD monitor is open fully. Turn the Power Dial to "PLAY" while pressing down the lock button located on the dial.

2 ACCESS PLAYBACK MENU

Press **MENU**. The Playback Menu appears in the LCD monitor and on the connected TV.

3 SELECT FUNCTION

Place the pointer next to the desired function by pressing the **–/+** button, then press **MENU**. The pointer stops blinking, indicating that the function has been selected.

4 SET FUNCTION PARAMETERS

Press the **–/+** button to cycle through the available settings for the selected function, and stop when the desired setting appears. Then press **MENU**, and the pointer automatically moves to "END".

- To set parameters for other functions, repeat steps **3** and **4**.

5 CLOSE MENU

Press **MENU** again, and the menu disappears.

Playback Sound

During playback, the camcorder detects the sound mode in which the recording was made, and plays the sound back. Select the type of sound to accompany your playback picture. (32 kHz is preset to "SOUND 1" and 48 kHz is preset to "FULL SOUND".)

RECORDING SOUND	DISPLAY	OUTPUT SOUND
32 kHz	FULL SOUND	Stereo sound
	SOUND 1	
	SOUND 2	
48 kHz	FULL SOUND	Stereo sound
	SOUND 1	"L" sound is output on both channels
	SOUND 2	"R" sound is output on both channels

When watching a tape recorded at 32 kHz, if you want to change the output sound, access the Playback Menu and, in step **3** on page 54, select "32kHz MODE" and set it for "FULL SOUND", "SOUND 1" or "SOUND 2". When playing back a tape recorded at 48kHz, set in the same manner. For information on output sound during Audio Dubbing, see page 65.

NOTES:

- *You can also use the RM-V708U or RM-V710U remote control's* ***AUDIO MONITOR*** *Button to change the output sound (without having to access the Playback Menu). Make sure you point the remote control at the Docking Station's sensor.*
- *During playback, the camcorder detects the sound mode in which the recording was made. This detection cannot be made during fast-forward or rewind.*

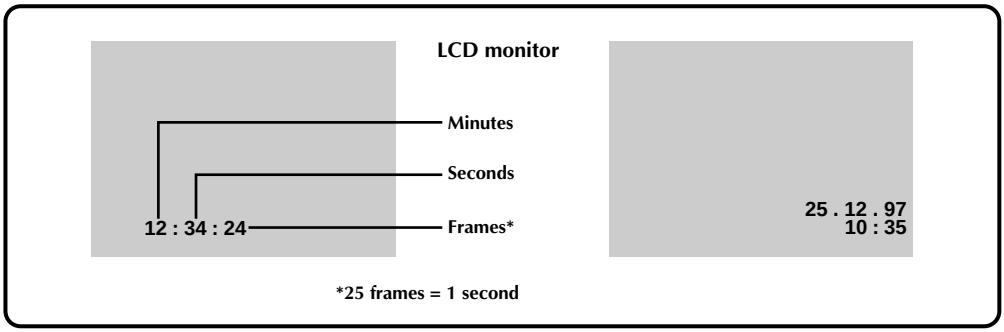

TIME CODE (Displaying The Time Code During Playback)

You can display the Time Code on screen during playback. This is especially useful for editing. This function is preset to "OFF". To turn it on, select "TIME CODE" at the Playback Menu and change the setting (☞ pg. 54).

ON– The Time Code is displayed on the playback screen.

OFF– The Time Code doesn't appear.

DISPLAY (Displaying the Date During Playback)

If the time has been set, the date is automatically recorded separately from the recorded video signal. You can display or remove the date anytime during playback. This function is preset to "ON". To turn it off, select "DISPLAY" at the Playback Menu and change the setting (☞ pg. 54).

ON– The date is displayed on the playback screen.

OFF– The date is not displayed.

Playback Zoom

The recorded pictures can be magnified up to 10x at any time during playback.

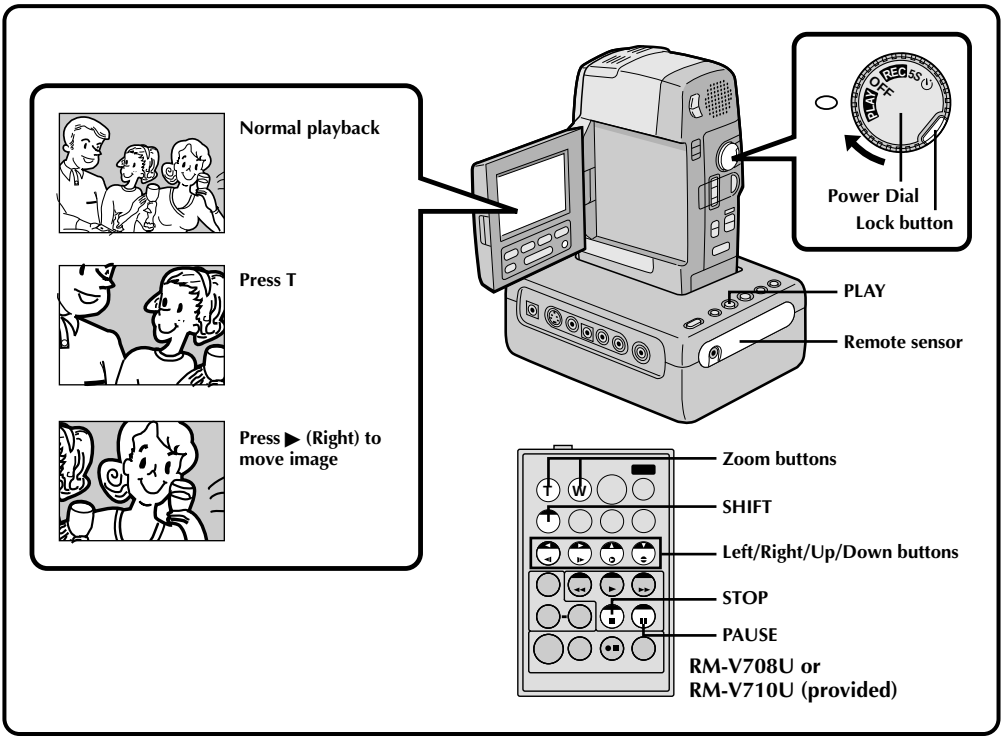

1 SELECT OPERATION MODE

First make sure the LCD monitor is open fully. Turn the Power Dial to "PLAY" while pressing down the lock button located on the dial.

2 FIND THE SCENE OF INTEREST

Press play to start playback.

3 ACTIVATE ZOOM

Press the zoom buttons (**T/W**) on the remote control. Make sure the remote control is pointed at the Docking Station's sensor.

• Pressing **T** zooms in.

4 LOCATE PORTION OF MAGNIFIED SCENE

You can move the image on screen around to find a particular portion of the picture. While holding down **SHIFT**, press ◀ **(Left),** ▶ **(Right),** ▲ **(Up)** and ▼ **(Down)**.

5 END ZOOM

Press and hold **W** until magnification returns to normal. Or, press **STOP** and then press **PLAY**.

NOTES:

- *Zoom can also be used during slow-motion and normal playback.*
- *If the Video Echo effect (☞ pg. 57) is selected during playback zoom, playback zoom is canceled.*

Playback Effects

These effects allow you to be creative with the playback picture. You can use any one of the 5 effects.

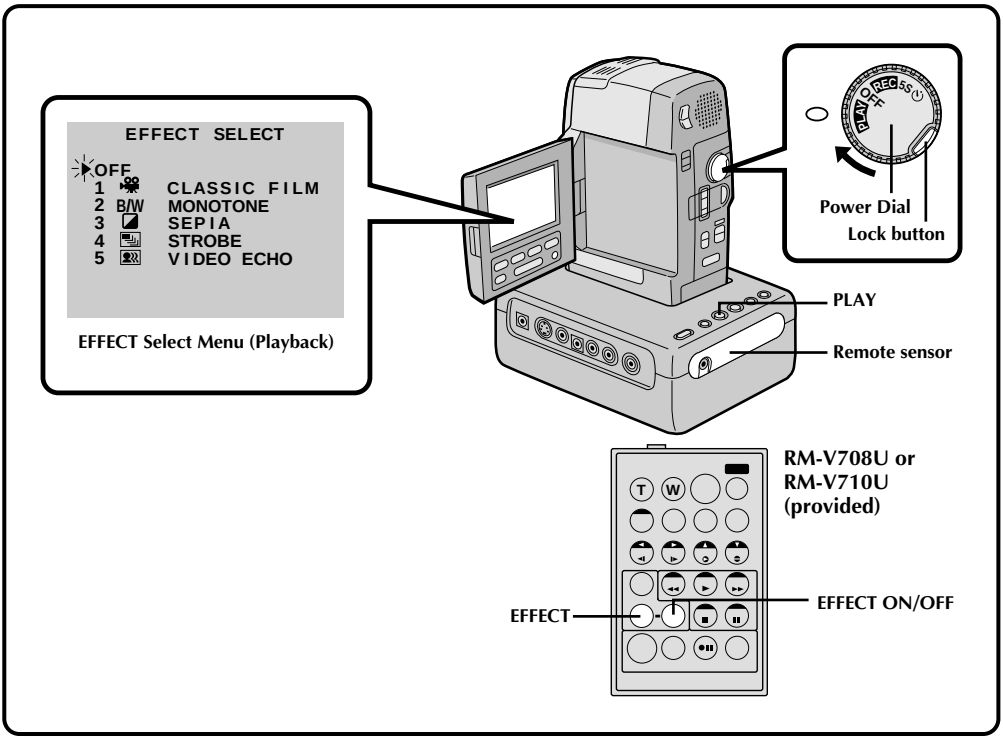

1 SELECT OPERATION MODE

First make sure the LCD monitor is open fully. Turn the Power Dial to "PLAY" while pressing down the lock button located on the dial.

2 START PLAYBACK

Press **PLAY**.

3 ACCESS EFFECT SELECT MENU

Point the remote control at the Docking Station's sensor and press **EFFECT**. The EFFECT Select Menu appears on the LCD monitor.

4 SELECT EFFECT

Place the pointer next to the desired effect by pressing **EFFECT**. After 2 seconds the menu disappears and the selected function is activated.

NOTE:

*To deactivate the selected effect, press **EFFECT ON/OFF** on the remote control.*

The effects that can be used during playback are *Classic Film, Monotone, Sepia, Strobe and Video Echo*. The effects work the same in playback as they did in recording. Refer to page 41 for more information.

Docking Station

Refer to "Docking Station Attachment" on page 51 for attachment procedures. Make sure the camcorder is attached to the Docking Station before beginning editing.

Dubbing

You can copy recorded scenes from the camcorder onto a videotape. Refer to your VCR's instruction manual for details.

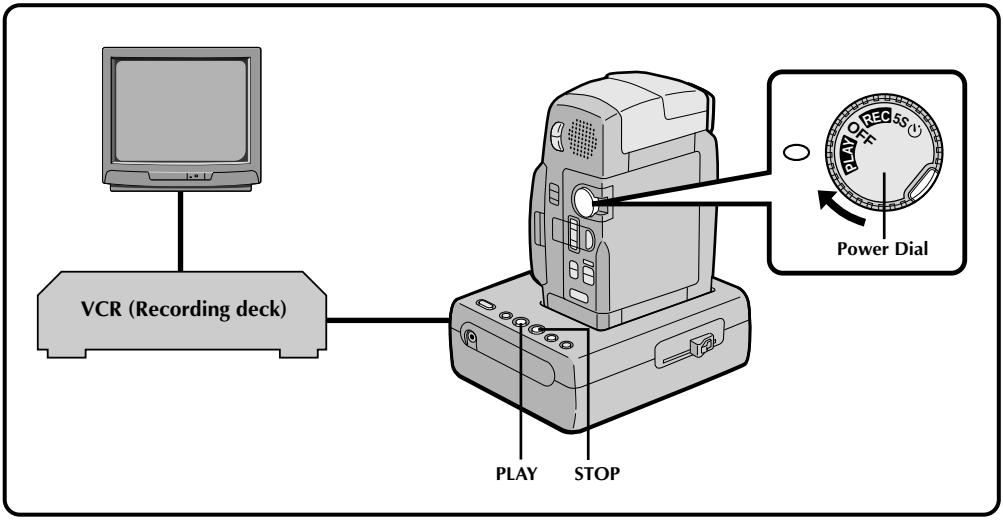

1 MAKE CONNECTIONS
Connect the Docking Station to your VCR as shown in the illustration on page 52.

2 START PLAYBACK
Press **PLAY** to play back the source tape.

3 START RECORDING
While watching on the connected TV, engage your VCR's record mode from the spot on the source tape you want to begin recording.

4 PAUSE RECORDING
Engage your VCR's pause mode to stop recording a segment.

5 END RECORDING
Press **STOP** to stop the source tape, and engage the VCR's stop mode.

NOTES:

- *You can use Playback Zoom (☞ pg. 56) or Playback Effects (☞ pg. 57) in step **2**.*
- *Before you start dubbing, make sure that the LCD moitor indications don't appear on the connected TV. If they do appear during dubbing, they are being recorded onto the new tape.*
  *To clear the Playback Sound Mode Display, press **DISPLAY** on the RM-V708U or RM-V710U Remote Control.*
- *Select "DISPLAY" and "TIME CODE" from the Playback Menu (☞ pg. 54) to show or hide the Date/Time and the Time Code on the recording.*
- *To show or hide all indications, press the **IND/DISPLAY** button on the camcorder.*

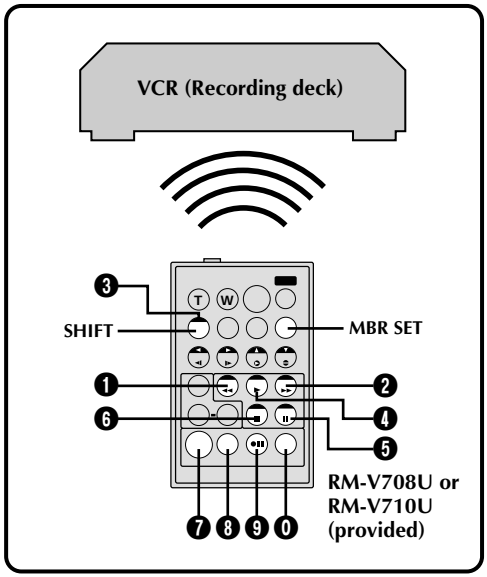

VCR CODE LIST

VCR BRAND NAME	BUTTONS (A) (B)
AKAI	6 2 6 4 7 7
BLAUPUNKT	1 3
FERGUSON	9 7 9 8 3 2
GRUNDIG	1 4 3 4
HITACHI	6 6 6 3
JVC A B C	9 1 9 6 9 3
MITSUBISHI	6 7 6 8
NEC	3 7 3 8
PANASONIC	1 3 1 7 1 1 9 4 1 8
PHILIPS	1 9 9 5 1 1 9 4 9 1 9 6 1 2 3 3
SANYO	3 6 3 5
SELECO, REX	9 1 9 6
SHARP	1 5 1 0
SONY	6 5 6 0 3 9 3 1
THOMSON, TELEFUNKEN, SABA, NORDMENDE	9 1 9 6 9 7 3 2
TOSHIBA	6 9 6 1

Brand Setting

Before you can perform Automatic Dubbing, or control the VCR using the RM-V708U or RM-V710U remote control, you must set the VCR brand.

SET REMOTE/VCR CODE

1 SET REMOTE TO OPERATE VCR

Turn off the power to the VCR and point the remote toward the VCR's infrared sensor. Then, referring to the VCR CODE LIST on the left, press and hold **MBR SET**, and press button (A) and then (B).

- The code is automatically set once you release the **MBR SET** button, and the VCR's power comes on.

2 OPERATE THE VCR

Make sure the VCR's power is on. Then, while holding **SHIFT**, press the button on the remote for the desired function. The functions the remote can control are PLAY, STOP, PAUSE, FF, REW and VCR REC STBY (you don't need to press **SHIFT** for this one).

You're now ready to try Random Assemble Editing.

IMPORTANT

Although the MBR is compatible with JVC VCRs and those of many other makers, it may not work with yours or may offer limited functions.

NOTES:

- *If the VCR's power doesn't come on in step **1**, try another code from the VCR CODE LIST.*
- *Some brands of VCR don't come on automatically. In this case, turn the power on manually and try step **2**.*
- *If the RM-V708U/V710U is not able to control the VCR, use the controls on the VCR.*

Random Assemble Editing

Using the RM-V708U or RM-V710U remote control, you can use P.AE/Effects and make an original edited tape.

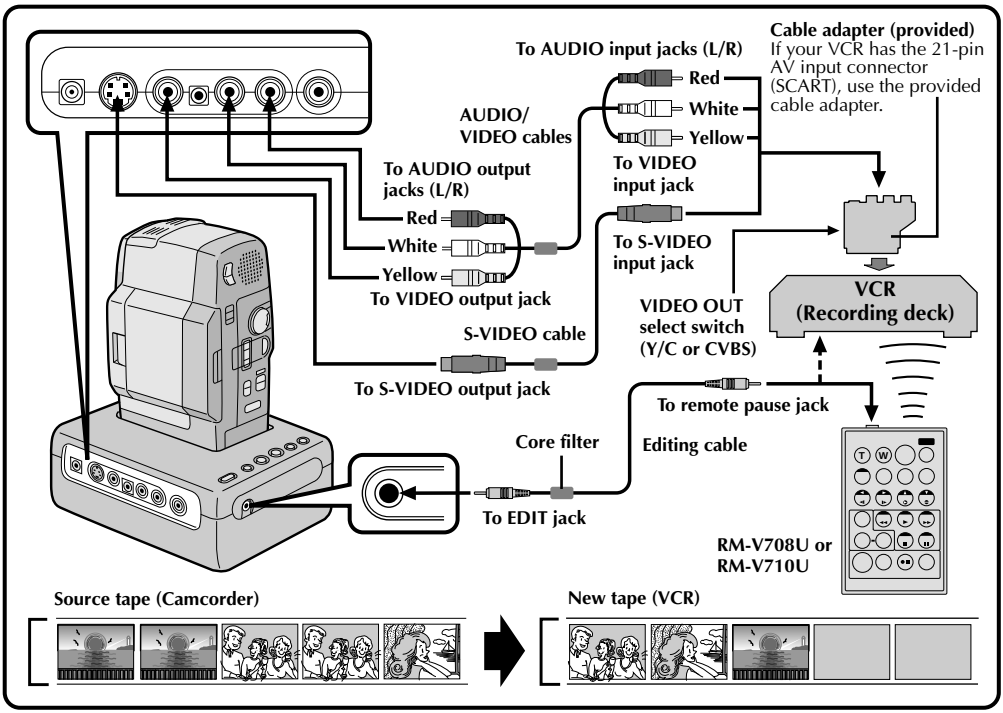

1 MAKE CONNECTIONS

Connect the Docking Station to your VCR and make sure that the playback picture and sound are available on the connected TV (☞ pg. 52).

2 START SOURCE PLAYBACK (IF NECESSARY)

First turn the Power Dial to "PLAY". Press **PLAY** and then press **R.A. EDIT ON/OFF** on the remote control. Make sure to point the remote control at the Docking Station's sensor.

- The Random Assemble Editing Menu appears on the TV screen.

3 EXECUTE FADE/WIPE IN (IF NECESSARY)

Press **FADE/WIPE**.

- Cycle through the effects by pressing repeatedly, and stop when the one you want is displayed.
- You can't use a Picture Wipe/Dissolve at the beginning of Program 1, or at the end of the last scene.

NOTES:

- *When using a JVC VCR with a remote pause terminal, connect the editing jack on the Docking Station to the VCR's remote pause terminal using an editing cable.*
- *If you use a JVC VCR not equipped with a remote pause terminal or a non-JVC VCR, connect the Docking Station's editing jack to the remote control's remote pause terminal using an editing cable.*
- *If the VCR has an S-Video input terminal, connect it using an S-Video cable.*
- *If the VCR has only one audio input terminal, connect it using a conversion plug (not provided).*
- *When using the provided cable, make sure you connect the end of the cable with the core filter to the Docking Station.*
- *Set the VIDEO OUT select switch of connector as required: either to "CVBS" (with the direct VCR connection) or to "Y/C" (with the RGB converter connection).*

To Operate The VCR With The Remote Control . . .

..... press and hold **SHIFT**, then press the appropriate control button.

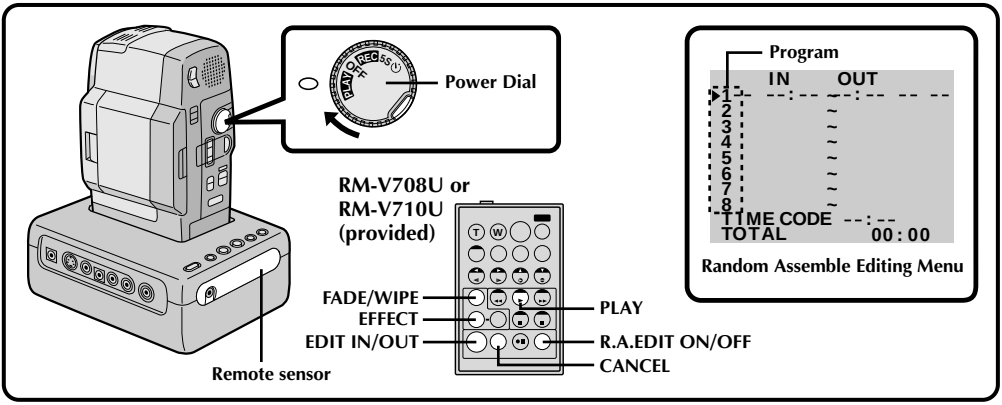

4 SET EDIT-IN POINT

At the beginning of the scene, press **EDIT IN/OUT** on the remote control. The Edit-In position appears in the LCD monitor and on the connected TV.

5 SET EDIT-OUT POINT

At the end of the scene, press **EDIT IN/OUT**. The Edit-Out position appears in the LCD monitor and on the connected TV.

6 USE FADE WIPE ON SCENE TRANSITION (IF NECESSARY)

Press **FADE/WIPE**.

- Cycle through the effects by pressing repeatedly, and stop when the one you want is displayed.
- If you select a Fade/Wipe effect for an Edit-Out point, the effect is automatically applied to the following Edit-In point.
- When you use Fade/Wipe effects, that time is included in the total time (this does not apply to Picture Wipe/Dissolve).

7 USE P.AE/EFFECT (IF NECESSARY)

Press **EFFECT**.

- Cycle through the effects by pressing repeatedly, and stop when the one you want is displayed.
- You can use Classic Film, Monotone, Sepia, Strobe or Video Echo effects.

8 CONTINUE EDITING

Repeat steps **4** – **7**.

- To change previously registered points, press **CANCEL** on the remote control. The registered points disappear, one at a time, from the most recently registered point.
- If you're not using Fade/Wipe or P.AE/Effects, repeat steps **4** and **5** only.

NOTES:

- *Before Random Assemble Editing, make sure the LCD monitor indications don't appear on the TV monitor. If they appear during Random Assemble Editing, they will be recorded onto the new tape. To clear them, set "ON SCREEN" to "OFF" (☞ pg. 43). When Random Assemble Editing starts, its indications disappear and are not recorded on the new tape.*
- *When the source tape has more than 2 identical time codes (☞pg. 21), the camcorder may not find the Edit-In point you chose and a malfunction may occur.*
- *When choosing a scene, set Edit-In and Edit-Out points so there's a relatively large difference between them.*
- *If the search time for an in-point exceeds 5 minutes, the recording deck's Record-Standby mode will be cancelled and editing will not take place.*
- *If there are blank portions before or after the Edit-In and Edit-Out points, a blue-backed screen may be included in the edited version.*
- *Since time codes register time only as accurately as seconds, the time code total time may not match the total program time exactly.*
- *Turning off the camcorder's power erases all registered Edit-In and Edit-Out points.*
- *If you use Sepia or Monotone P.AE/Effects, you can't use the Dissolve or Black & White Fader. In this case the Dissolve or Black & White indicator begins blinking. Once the next Edit-In point is registered, the effect is turned off. To combine these effects, use Sepia or Monotone during recording, then use Dissolve or Black & White Fader during Random Assemble Editing.*

CONTINUED ON NEXT PAGE

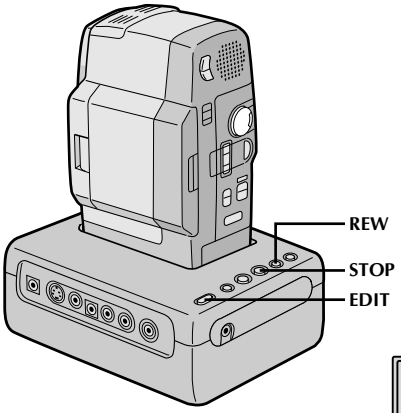

	IN	OUT	MODE
1	00:25	~02:05	P
2	07:18	~08:31	--
3	-- 03:33	~05:53	B/W
4	09:30	~13:15	
▶5	15:55	~--:--	-- --
6		~	
7		~	
8		~	
TIME CODE		15:55	
TOTAL		09:02	

R.A.EDIT program screen

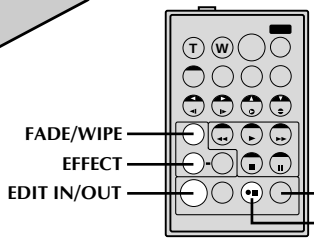

RM-V708U or RM-V710U (provided)

9 PREPARE SOURCE TAPE

Rewind the tape in the camcorder to the beginning of the scene you want to edit and press **PAUSE**.

10 ENGAGE VCR'S RECORD-PAUSE MODE

Point the remote control toward the VCR's front panel and press **VCR RECORD/ STANDBY**, or manually engage the VCR's Record-Pause mode.

11 START EDITING

Press **EDIT** on the Docking Station. Editing proceeds as programmed, right through to the end of the last registered scene.

- When dubbing is complete, the camcorder enters the Pause mode, and the recorder enters its Record/Standby mode.
- If you don't register an Edit-Out point, the tape will be dubbed all the way to the end automatically.

12 STOP EDITING

Engage the Stop modes for the camcorder and the recorder.
To make the R.A. Edit counter display disappear, press **R.A. EDIT ON/OFF** on the remote control.

NOTES:

- *When the editing cable is connected to the Pause terminal during dubbing, make sure the remote control is pointed at the recorder's sensor, and that the path between the two is unobstructed.*
- *If, during dubbing, you press any button on the camcorder, its Record/Standby mode is automatically engaged.*
- *Random Assemble Editing may not function properly when using a tape including several duplicated Time Codes. (☞ pg. 21).*

For More Accurate Editing

Some VCRs make the transition from Record/Standby to Record mode faster than others. Even if you begin editing for the camcorder and the VCR at exactly the same time, you may lose scenes you wanted, or find that you've recorded scenes you didn't want. For a cleanly edited tape, confirm and adjust the timing of the camcorder against your VCR.

Diagnosing VCR's against Camcorder Timing

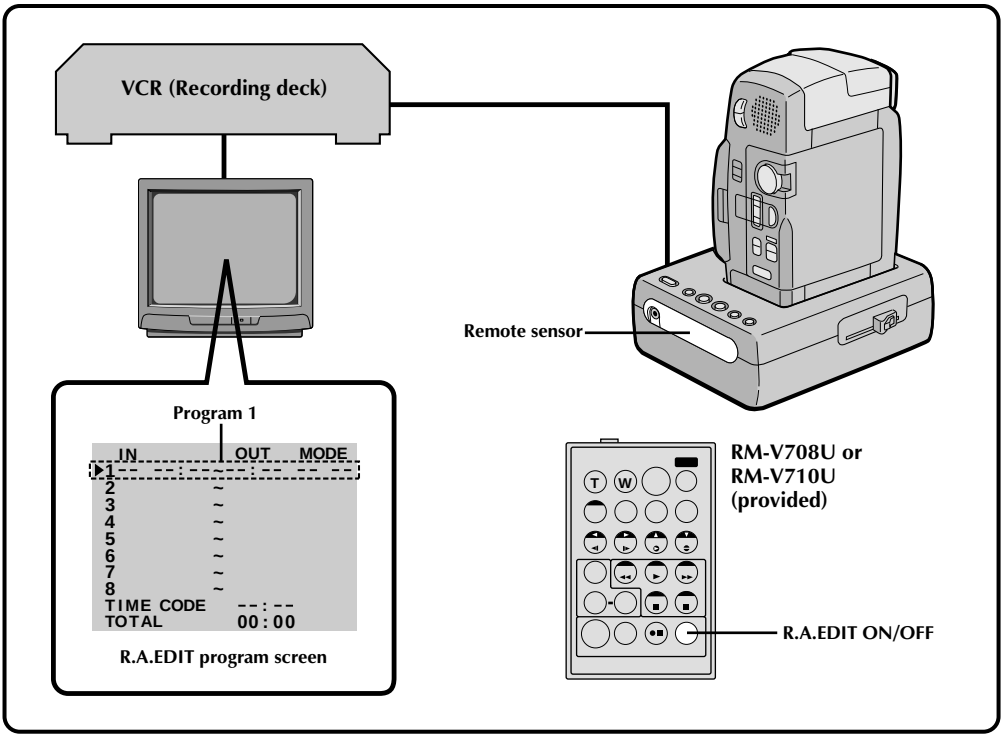

1 PREPARE FOR R.A. EDIT

Play back the tape in the camcorder, then point the remote control at the Docking Station's sensor and press **R.A. EDIT ON/OFF**.

- "R.A. EDIT" appears on the TV screen.

2 CHOOSE A SCENE

Perform Random Assemble Editing on Program 1 only. In order to check VCR and camcorder timing, select the beginning of a scene transition as your Edit-In point.

3 PLAY BACK DUBBED SCENE

- If any images from the scene prior to the transition you chose for your Edit-In point were recorded, that means your VCR moves quickly from Record/Pause to Record mode.
- If the scene you tried to dub starts in progress, the VCR is slow to start recording.

CONTINUED ON NEXT PAGE

Adjustment of VCR's against Camcorder Timing

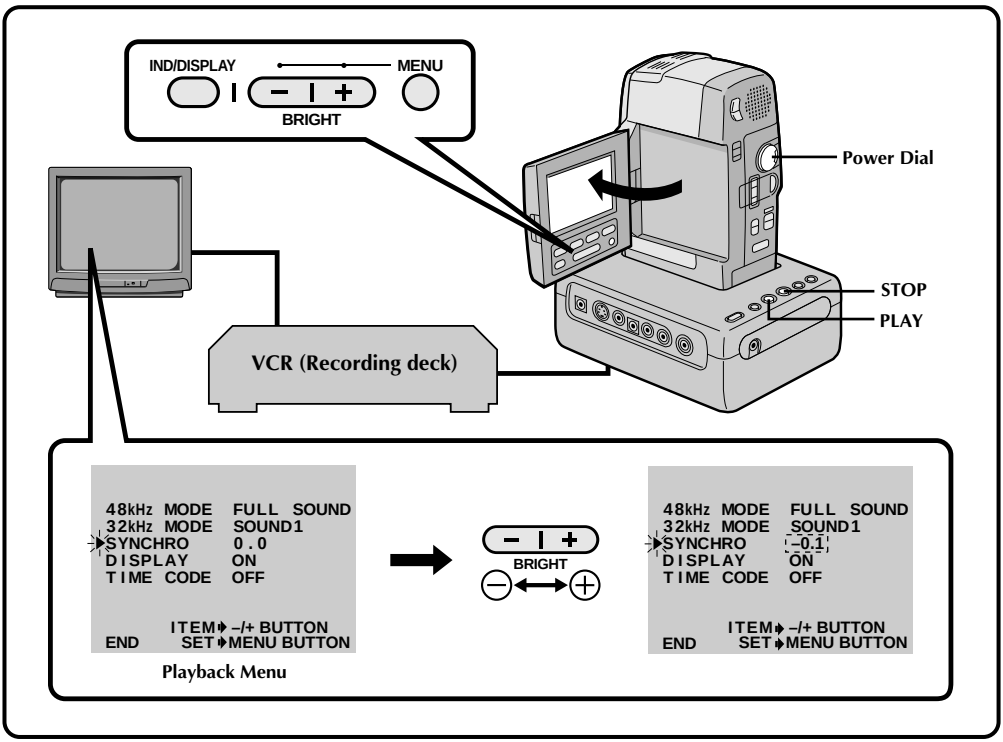

Playback Menu

4 SELECT OPERATION MODE

Open the LCD monitor and turn the Power Dial to "PLAY" while pressing down the lock button located on the dial.

5 ACCESS PLAYBACK MENU

Press **MENU**. The Playback Menu appears on the TV screen.

6 SELECT FUNCTION

Place the pointer next to "SYNCHRO" by pressing the **–/+** button, then press **MENU**. The pointer stops blinking, indicating that the function has been selected.

7 INPUT CORRECTION DATA

Based on the diagnostics performed, (☞ pg. 63) you can now increase the VCR's speed by pressing "**+**". You can also slow down the VCR's speed by pressing "**–**". The adjustment range is from –1.3 to +1.3 seconds, in 0.1-second increments.

8 CLOSE MENU

Press **MENU** twice.

- Now perform Random Assemble Editing beginning with step **2** on page 60.

NOTE:

Depending on the recorder, there may be situations where the timing difference cannot be fully corrected.

Audio Dubbing

The audio track can be customized only when recorded on the 32Khz mode (☞ pg. 33).

NOTE:

Audio Dubbing is not possible on a tape recorded at 48 kHz, on a tape recorded in the LP mode or on a blank portion of a tape.

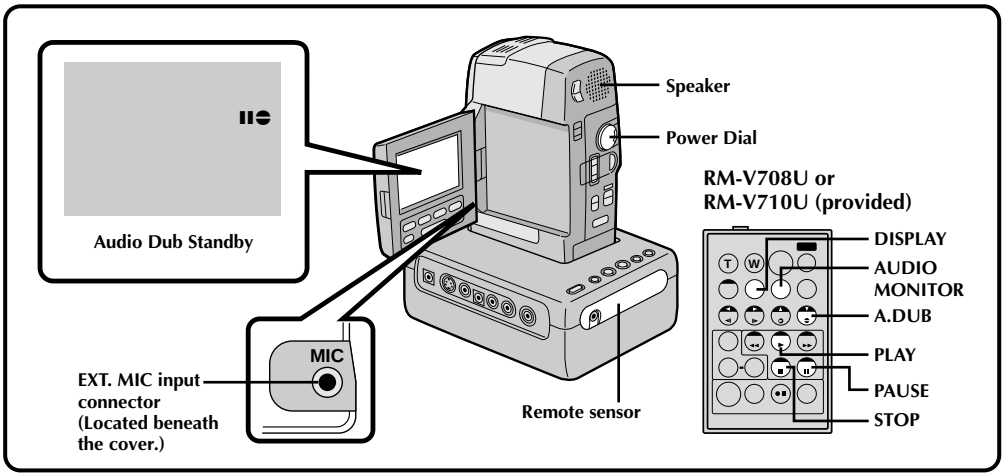

1 FIND EDIT-IN POINT
Play back the tape to locate the point where editing will start, then press **PAUSE**.

2 ENGAGE AUDIO DUB STANDBY
While holding **A. DUB** on the remote control, press **PAUSE**. "⏸" appears.

3 BEGIN DUBBING
Press **PLAY**, then begin "narrating".

4 PAUSE DURING DUBBING
Press **PAUSE**.

5 STOP DUBBING
Press **STOP**.

NOTES:

- *Audio dubbing is possible using an optional microphone connected to the EXT. MIC input connector.*
- *While an optional microphone is connected, the built-in microphone is disabled.*
- *When editing onto a tape that was recorded at 32 kHz, the old and new soundtracks are recorded separately.*
- *To select the desired sound for playback, press **AUDIO MONITOR** on the remote control.*
- *If you dub onto a blank space on the tape, the sound may be disrupted. Make sure you only edit recorded areas.*
- *If feedback or howling occurs during TV Playback, move the Docking Station so the camcorder's microphone is away from the TV, or turn down the TV's volume.*
- *Sound is not heard from the speaker during Audio Dubbing. To hear sound, connect optional headphones to the headphones jack.*
- *If you change from 32 kHz to 48 kHz in mid-recording and then use the tape for Audio Dubbing, it is not effective from the point where 48 kHz recording began.*
- *During Audio Dubbing, when the tape moves to scenes recorded in the LP mode, scenes recorded at 48 kHz or a blank portion, Audio Dubbing stops and "ERROR: REFER MANUAL" appears on the LCD monitor.*

RECORDING SOUND	DISPLAY	OUTPUT SOUND
32 kHz	FULL SOUND	Original and new tracks are combined and output in stereo.
	SOUND 1	Original track is output on both "L" and "R" channels in stereo.
	SOUND 2	New track is output on both "L" and "R" channels in stereo.

Insert Editing

You can record a new scene into a previously recorded tape, replacing a section of the original recording with minimal picture distortion at the in- and out-points. The original audio remains unchanged.

NOTE:

Insert Editing is not possible on a tape recorded in the LP mode or on a blank portion of a tape.

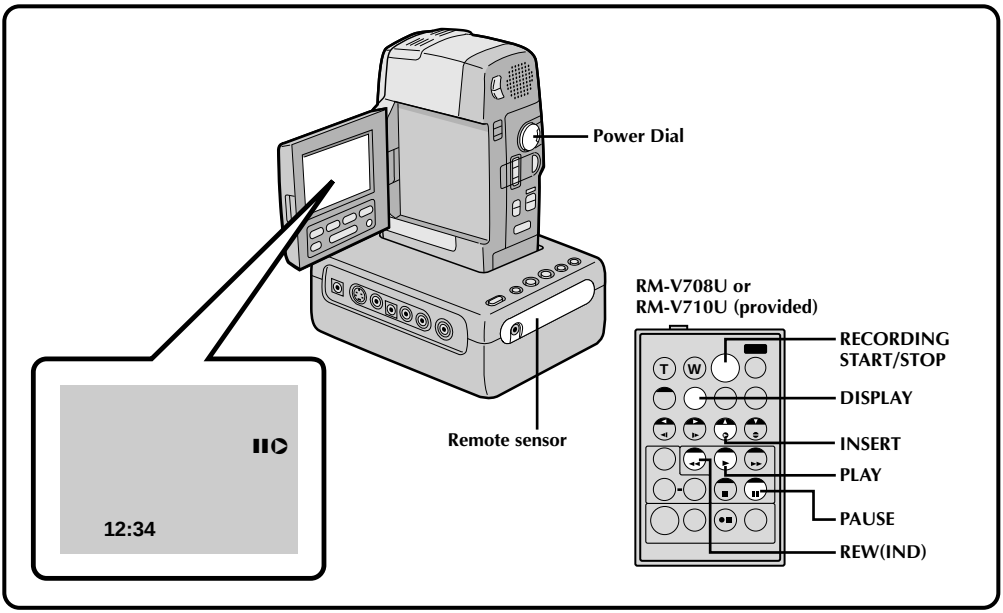

1 FIND EDIT OUT POINT
Open the LCD monitor and turn the Power Dial to "PLAY" while pressing down the lock button located on the dial. Confirm the time code at this point (☞ pg. 55).

2 FIND EDIT IN POINT
Press **REW** until the point is located, then press **PAUSE**.

3 PREPARE FOR INSERT EDITING
Press and hold **INSERT** on the remote control, then press **PAUSE**. "❚❚◯" and the Time Code (min.:sec.) appear in the LCD monitor.

4 START RECORDING
Press **RECORDING START/STOP** to begin editing.

- Confirm the insert at the time code you checked in step **1**.

5 PAUSE DURING EDITING
Press **RECORDING START/STOP**. Press again to resume editing.

6 STOP EDITING
Press **RECORDING START/STOP**, then press **STOP**.

NOTES:

- *When performing Insert Editing, the tape's Video Area and Sub-Code Area (☞ pg. 6) are rewritten, so the date and time information changes.*
- *If you perform Insert Editing onto a blank space on the tape, the audio and video may be disrupted. Make sure you only edit recorded areas.*
- *During Insert Editing, when the tape moves to scenes recorded in the LP mode or a blank portion, Insert Edting stops and "ERROR: REFER MANUAL" appears on the LCD monitor.*

If, after following the steps in the chart below, the problem still exists, please consult your nearest JVC dealer or Technical Service Center.

SYMPTOM	POSSIBLE CAUSES	CORRECTIVE ACTION
1. No power is supplied.	*1.* • The power is not connected properly. • The battery is dead. • The LCD monitor is not open fully when recording.	*1.* • Connect the AC Adapter securely (☞ pg. 10). • Replace the dead battery with a fully charged one (☞ pg. 9). • Open the LCD monitor fully. The LCD monitor turns on/off when it is opened/closed while the Power Dial is set to “REC”.
2. Recording cannot be performed.	*2.* • The tape’s record safety tab is set to “SAVE”. • The Power Dial is set to “PLAY”. • The cassette's cover is open.	*2.* • Set the tape’s record safety tab to “REC” (☞ pg. 13). • Set the Power Dial to “REC” (☞ pg. 19). • Close the cassette's cover.
3. There is no playback picture.	*3.* • The camcorder is not getting power, or some other malfunction exists.	*3.* • Turn the camcorder’s power off and on again (☞ pg. 19).
4. Some functions are not available.	*4.* • The shooting mode selector is set to “AUTO”. • The Power Dial is set to “5S”.	*4.* • Set the shooting mode selector to "MANUAL" (☞ pg. 18). • Set the Power Dial to any position except “5S” (☞ pg. 28).
5. The focus does not adjust automatically.	*5.* • Focus is set to “MANUAL”. • The recording was done in a dark place, or the contrast was low. • The lens is dirty or covered with condensation.	*5.* • Set Focus to “AUTO” (☞ pg. 46). • Clean the lens and check the focus again (☞ pg. 72).
6. The cassette won’t load properly.	*6.* • The cassette is in the wrong position. • The battery’s charge is low.	*6.* • Set it in the right position (☞ pg. 13). • Install a fully charged battery (☞ pg. 8).
7. Play, Rewind and Fast-Forward functions don’t work.	*7.* • The Power Dial is not set to “PLAY”. • The cassette’s cover is open.	*7.* • Set the Power Dial to “PLAY” (☞ pg. 49). • Close the cassette's cover (☞ pg. 13).
8. The tape is moving, but there’s no picture.	*8.* • The LCD monitor is turned off. • Your TV has AV input terminals, but is not set to its VIDEO mode.	*8.* • Press and hold the IND/DISPLAY button for over 2 seconds (☞ pg. 23). • Set the TV to the mode or channel appropriate for video playback (☞ pg. 53).
9. In the 5-Second mode, recording ends before 5 seconds have elapsed.	*9.* • The 5-Second mode in the System Menu is set to “ANIMATION”.	*9.* • Select “5S” or “5SD” in the System Menu (☞ pg. 33).

CONTINUED ON NEXT PAGE

SYMPTOM	POSSIBLE CAUSES	CORRECTIVE ACTION
10. Even though "GAIN UP" was set to "A⇧", scenes shot in dark places are not brightened.	***10.*** • Depending on the light source, the 1/30 shutter speed may be deactivated in order to reduce the shakiness in the picture.	***10.*** ———
11. Snapshot mode cannot be used.	***11.*** • P.AE/Effects Sepia, Monotone or Slow (Slow Shutter) are activated. • The Squeeze mode is selected.	***11.*** • Disengage them (☞ pg. 40). • Disengage the Squeeze mode (☞ pg. 31).
12. Although the SNAPSHOT button is pressed, the white border does not appear.	***12.*** • "PHOTO FRAME" is set to "OFF" in the system menu. • The Cinema mode is engaged, disabling the white border.	***12.*** • Set "PHOTO FRAME" to "ON" in the system menu (☞ pg. 32). • Disengage the Cinema mode (☞ pg. 31).
13. Digital Zoom doesn't work.	***13.*** • 10X optical zoom is selected. • The Video Echo effect is activated. • Picture Wipe or Dissolve are being used in a scene transition. • 5-Second recording was done with the Power Dial set to "5S", and with "5SD" selected in the System Menu. • Snapshot Dissolve was attempted during Digital Zoom.	***13.*** • Turn off the Video Echo effect (☞ pg. 41). • Wait until the Picture Wipe or Dissolve effects are completed (☞ pg. 36). • Change the setting of either the System Menu or the Power Dial (☞ pg. 32). • Do not attempt to take a Snapshot when performing Digital Zoom (☞ pg. 26).
14. P.AE/Effects and Fade/ Wipe Effects don't work.	***14.*** • The shooting mode selector is set to "AUTO". • The Power Dial is set to "5S".	***14.*** • Set the shooting mode selector to "MANUAL" (☞ pg. 18). • Change the setting of the Power Dial.
15. The Black & White Fader doesn't work.	***15.*** • The Sepia or Monotone effects are activated.	***15.*** • Turn off Sepia and Monotone (☞ pg. 40).
16. The Dissolve function doesn't work.	***16.*** • P.AE/Effects Sepia, Monotone or Slow are activated. • The Squeeze mode is selected.	***16.*** • Turn off Sepia and Monotone before adding Dissolve to a scene transition (☞ pg. 40). • Make sure that the Squeeze mode in the Recording Menu is set to "OFF" (☞ pg. 31).
17. Scene transition does not go as expected.	***17.*** • When using "Picture Wipe/ Dissolve" (☞ pg. 36) or "Dissolves during 5 second mode recording" (☞ pg. 28), there is a delay of a fraction of a second between the previous record stop-point and the Dissolve start-point. This is normal, but this slight delay becomes especially noticeable when shooting fast-moving subject or during rapid panning.	***17.*** ———

SYMPTOM	POSSIBLE CAUSES	CORRECTIVE ACTION
18. The Picture Wipe and Dissolve functions don't work.	***18.*** • The last selected editing scene is ending. • At the end of the last selected scene for editing, the Power Dial was set to "OFF". • The power is off. • The previously selected P.AE/Effect was changed after the last selected scene for editing was registered. • The P.AE/Effects in the Recording Menu were exchanged after the last selected scene for editing was registered.	***18.*** • Select Picture Wipe or Dissolve before beginning recording. The effects are then automatically activated (☞ pg. 36). • Do not turn off the camcorder's power after setting Edit-In and Edit-Out points, as they will all be erased (☞ pg. 36). • The camcorder automatically shuts off after 5 minutes have elapsed in the Record/Standby mode. Make sure you continue operations within 5 minutes after engaging Record/Standby mode (☞ pg. 19). • Make sure you have selected the P.AE/Effects you want before starting editing (☞ pg. 40). • Exchanging P.AE/Effects may deactivate the effect(s) you selected. Once you've selected an effect, do not perform an exchange before beginning editing. If you do, make sure you don't replace the effect(s) you selected (☞ pg. 40).
19. The Picture Wipe function doesn't work.	***19.*** • The Slow (Slow Shutter) effect is activated. • The Squeeze or Cinema mode is selected in the Recording Menu.	***19.*** • Make sure the Squeeze mode, Cinema mode, or Slow effect is not activated when preparing to use the Picture Wipe function (☞ pg. 31, 41).
20. Even when Slow (Slow Shutter) isn't selected, the image looks like it is activated.	***20.*** • When shooting in the dark with GAIN UP set to **A≩**, the unit becomes highly sensitive to light and the image takes on an effect similar to Slow (Slow Shutter).	***20.*** • If you want the lighting to look more natural, set GAIN UP to "AGC" or "OFF" in the Recording Menu (☞ pg. 31).
21. The Video Echo effect doesn't work.	***21.*** • The Picture Wipe or Dissolve functions are in use. • The Squeeze mode is selected in the Recording Menu. • Snapshot Dissolve is in progress. • A Fade-In or Fade-Out is in progress (White Fader, Black Fader or Black & White Fader).	***21.*** • Make sure the Squeeze mode is set to "OFF" (☞ pg. 31). • Do not try to use the Video Echo effect during a Fade-In or Fade-Out (☞ pg. 35).

CONTINUED ON NEXT PAGE

SYMPTOM	POSSIBLE CAUSES	CORRECTIVE ACTION
22. There is no strobe when the Classic Film and Strobe effects are activated.	***22.*** • The Picture Wipe or Dissolve functions are in use. • Snapshot Dissolve is in progress.	***22.*** • Do not try to use the Classic Film or Strobe effects during a scene transition (☞ pg. 41).
23. White Balance cannot be activated.	***23.*** • The Sepia or Monotone effects are activated. • Snapshot Dissolve is in progress.	***23.*** • Turn off Sepia or Monotone before setting White Balance (☞ pg. 41). • Wait until the Snapshot Dissolve is finished before setting White Balance (☞ pg. 26).
24. When shooting a subject illuminated by bright light, vertical lines appear.	***24.*** • This is a result of exceedingly high contrast, and is not a malfunction.	***24.*** ———
25. There are disturbances in audio and video.	***25.*** • If Audio Dubbing or Insert Editing have been performed repeatedly on the same portion of the tape, disturbance to the sound and picture may result.	***25.*** • Use a new, or infrequently used, tape for Audio Dubbing and Insert Editing (☞ pg. 65, 66).
26. During recording, the date/time does not appear.	***26.*** • "DISPLAY" is set to "OFF" in the Date/Time Menu. • Interface shooting is performed. • The clock's lithium battery is not loaded, or its power is low.	***26.*** • Set "DISPLAY" to "ON" in the Date/Time Menu (☞pg. 12). • During interface shooting, the date/time does not appear (☞ pg. 24). • Confirm if the clock's lithium battery is loaded and if it has enough power (☞ pg. 11).
27. The indicators do not appear on the LCD monitor.	***27.*** • You have made the indicators on the LCD monitor disappear.	***27.*** • Press the IND/DISPLAY button to make the indicators appear on the LCD monitor (☞ pg. 23).
28. Images on the LCD monitor appear dark or whitish.	***28.*** • In places subject to low temperature, images become dark due to the characteristics of the LCD monitor. When this happens, the displayed colours differ from those that are actually recorded. This is not a defect of the camcorder. • When the LCD monitor's fluorescent light reaches the end of its service life, images on the LCD monitor become dark. Consult your nearest JVC dealer or Technical Service Center.	***28.*** • Adjust the brightness and angle of the LCD monitor (☞ pg. 23).
29. The rear of the LCD monitor is hot.	***29.*** • The light used to illuminate the LCD monitor causes it to become hot.	***29.*** • Close the LCD monitor to turn it off or set the Power Dial to "OFF", and let the unit cool down (☞ pg. 19).

SYMPTOM	POSSIBLE CAUSES	CORRECTIVE ACTION
30. The indicators and the image colour on the LCD monitor are not clear.	***30.*** • This may occur when the surface or the edge of the LCD monitor is pressed.	***30.*** ———
31. Images on the LCD monitor are jittery.	***31.*** • The speaker volume is too great.	***31.*** • Turn the speaker volume down (☞ pg. 73).
32. The LCD monitor and the lens have become dirty (ex. fingerprints).	***32.*** ———	***32.*** • Wipe them gently with soft cloth. Wiping strongly can cause damage.
33. The LCD monitor indications blink.	***33.*** • Certain FADE/WIPE, P.AE/ Effects and other functions that cannot be used togetherare selected at the same time.	***33.*** • Re-read the sections covering FADE/WIPE and P.AE/Effects (☞ pgs. 34 – 42).
34. Coloured bright spots appear all over the LCD monitor.	***34.*** • The LCD monitor is made with high-precision technology. However, black spots or bright spots of light (red, green or blue) may appear constantly on the LCD monitor. These spots are not recorded on the tape. This is not due to any defect of the unit. (Effective dots: more than 99.99 %)	***34.*** ———
35. The LCD monitor indications are distorted.	***35.*** • During playback of the unrecorded portion, High-speed Search and still playback, LCD monitor indications appear distorted. This is not a defect.	***35.*** ———
36. An unusual mark appears in the LCD monitor.	***36.*** ———	***36.*** • Check the section of the manual that explains LCD monitor indications (☞ pgs. 74, 75).
37. An error indication (E01 — E07) appears in the LCD monitor.	***37.*** • A malfunction of some kind has occurred. In this case the camcorder's functions become unusable.	***37.*** • Remove the tape or the battery pack, and wait a few minutes for the indication to clear. When it does, you can resume using the camcorder. If the indication remains, please consult your nearest JVC dealer or Technical Service Center.
38. The charge indicator on the AC Power Adapter/ Charger does not light.	***38.*** • The temperature of the battery is extremely high/ low. • Charging is difficult in places subject to extremely high/low temperatures.	***38.*** • To protect the battery, it is recommended to charge it in places with a temperature of 10°C to 30°C (☞ pg. 9).
39. The recording mode indicator "LP" blinks on the LCD monitor.	***39.*** • This occurs when recording in the LP mode is not available. After the indicator blinks, the recording mode switches to "SP" and recording goes on.	***39.*** ———

Cleaning The Camcorder

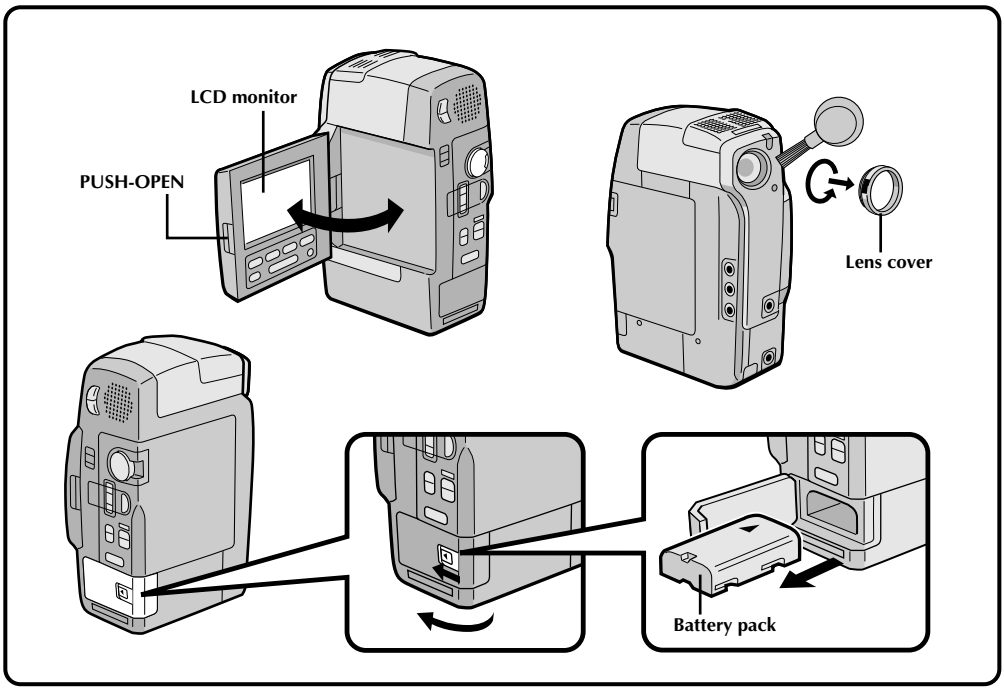

1 CLEAN EXTERIOR
Wipe gently with a soft cloth.

2 REMOVE LENS COVER
☞ pg. 14.

3 CLEAN LENS
Blow it with a blower brush, then wipe gently with lens cleaning paper.

4 RE-ATTACH LENS COVER
Do not forcefully re-attach the lens cover as this may damage it.

5 REMOVE POWER SUPPLY
Remove the battery pack or disconnect the AC Power Adapter/Charger.

6 OPEN LCD MONITOR
Press the **PUSH-OPEN** switch to open the LCD monitor fully.

7 CLEAN LCD MONITOR
With soft cloth, gently wipe the LCD monitor in a semicircular pattern. Avoid using too much pressure as this will smear the monitor screen, making it much more difficult to clean.

8 CLOSE LCD MONITOR

Main Unit

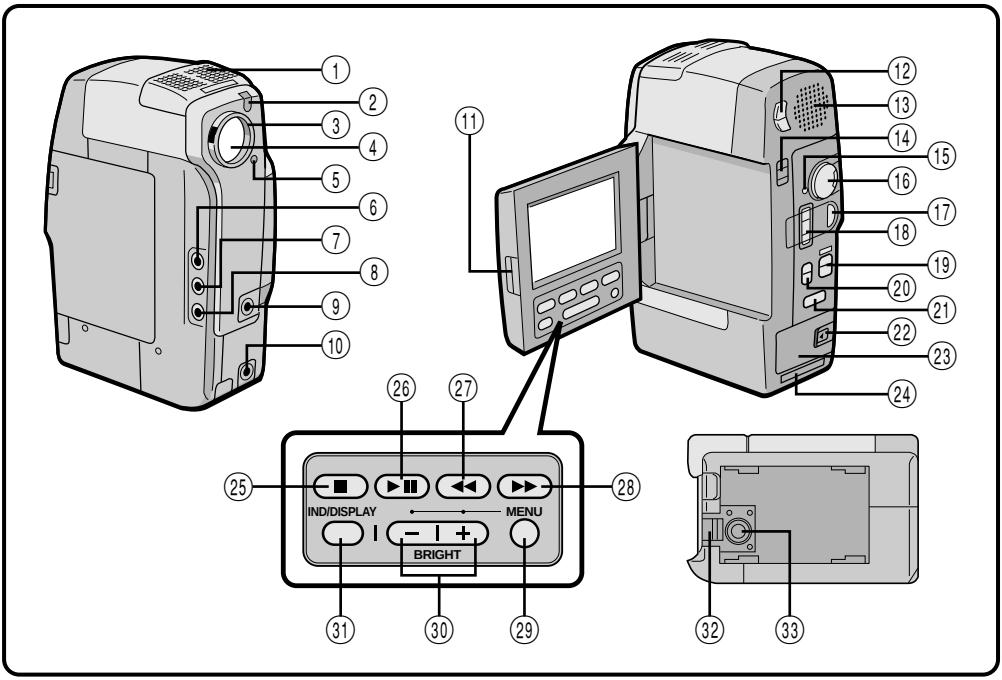

① **Stereo microphone**
Take care not to cover the sensor with your hand while shooting.
② **White Balance Sensor**
Take care not to cover the sensor with your hand while shooting.
③ **Lens cover** ..... ☞ pg. 14
When using an optional conversion lens or lens filter (commercially available), you must first detach the lens cover.
④ **Lens**
⑤ **Tally lamp (record indicator)**
Lights during recording.

Jacks ⑥ to ⑩ are located beneath the covers.

⑥ **Headphones jack**
⑦ **AUDIO output jack** ..... ☞ pg. 50
⑧ **VIDEO output jack** ..... ☞ pg. 50
⑨ **Ext. Mic input jack** ..... ☞ pg. 65
An optional microphone can be connected for use with shooting or audio dubbing. When an external microphone is used, the built-in microphone automatically shuts off.
⑩ **DC input jack** ..... ☞ pg. 10
⑪ **LCD monitor PUSH-OPEN switch** ..... ☞ pg. 19
⑫ **VOLUME buttons** ..... ☞ pg. 49
Adjusts the speaker volume.
⑬ **Speaker** ..... ☞ pg. 26
⑭ **OPEN/EJECT switch** ..... ☞ pg. 13
⑮ **Power lamp** ..... ☞ pg. 19
⑯ **Power Dial** ..... ☞ pg. 19
⑰ **RECORDING START/STOP button** ..... ☞ pg. 19
⑱ **Zoom switch** ..... ☞ pg. 25
⑲ **Shooting mode selector** ..... ☞ pg. 18
⑳ **SP-LP recording mode button** ..... ☞ pg. 14
㉑ **SNAPSHOT button** ..... ☞ pg. 26
㉒ **Battery cover open switch** ..... ☞ pg. 9
㉓ **Battery cover** ..... ☞ pg. 9
㉔ **Multi connector**
Located inside the cover. Connect to the Docking Station's multi connector. To avoid malfunction, do not touch this connector or force the cover open.
㉕ **Stop button** ..... ☞ pg. 49
㉖ **Play/Pause button** ..... ☞ pg. 49
Focus button ..... ☞ pg. 46
㉗ **P.AE/Effect button** ..... ☞ pg. 34
Rewind button ..... ☞ pg. 49
㉘ **Exposure button** ..... ☞ pg. 47
Fast-Forward button ..... ☞ pg. 49
㉙ **MENU button** ..... ☞ pg. 12
㉚ **–/+ button** ..... ☞ pg. 12
㉛ **IND/DISPLAY button** ..... ☞ pg. 23
㉜ **Hand strap eyelet** ..... ☞ pg. 14
㉝ **Tripod mounting socket** ..... ☞ pg. 16

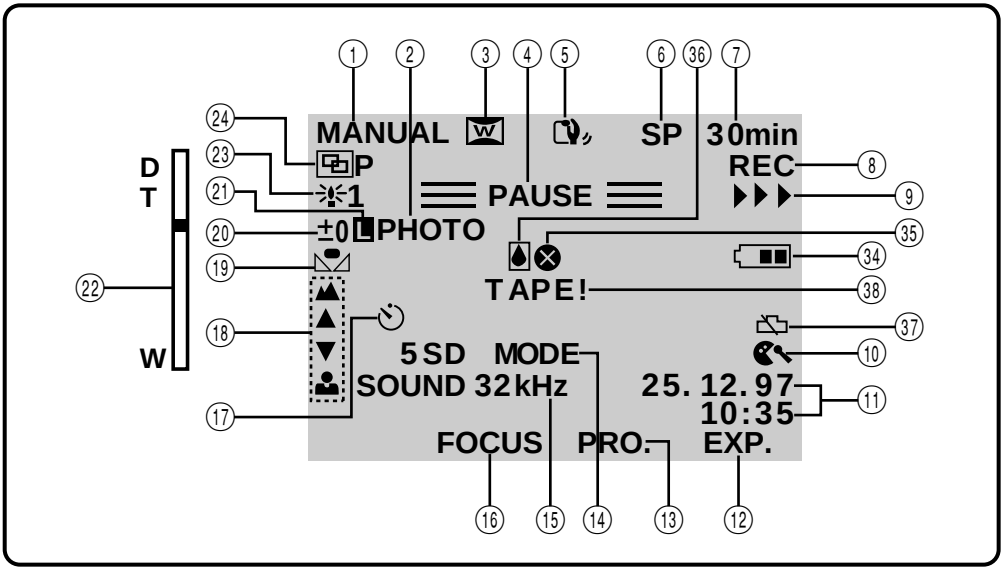

LCD Monitor Indications During Recording

No.	NAME & FUNCTION
①	**Shooting mode selector position and setting indications** (☞ pg. 18) Displays shooting mode selector position. When selecting functions, each name ("FOCUS", "EFFECT", "EXP.", etc.) is displayed.
②	**Snapshot indicator** (☞ pg. 26)
③	**Wide mode** (☞ pg. 31)
④	**Record-Standby indicator** (☞ pg. 19)
⑤	**Digital image stabilizer indicator** (☞ pg. 31)
⑥	**Recording mode indicator** (☞ pg. 14) Casette mark appears when no tape is loaded or, when you try to record with the record safety tab set to "SAVE".
⑦	**Tape Remaining indicator** (☞ pg. 22) When the LCD monitor indications are turned off or during interface shooting, the tape remaining indicator will not appear. However, when the remaining time reaches 2 minutes, appears indicating remaining time; (2 min.) (1 min.) (0 min.)
⑧	**Recording indicator** (☞ pg. 19)
⑨	**"Tape Running" indicator** (☞ pg. 19)
⑩	**Wind cut indicator** (☞ pg. 33)

No.	NAME & FUNCTION
⑪	**Date/Time display** (☞ pg. 12)
⑫	**Exposure setting indication** (☞ pg. 47)
⑬	**Fade/Wipe effects & P.AE/Effects indication** (☞ pg. 34, 40)
⑭	**Scene indicator** (☞ pg. 28)
⑮	**Sound mode display** (☞ pg. 33)
⑯	**Focus setting indication** (☞ pg. 46)
⑰	**Self-Timer indicator** (☞ pg. 29)
⑱	**Manual focus indicators** (☞ pg. 46)
⑲	**White balance indicator** (☞ pg. 45)
⑳	**Exposure control indicator** (☞ pg. 47)
㉑	**Iris lock indicator** (☞ pg. 48)
㉒	**Zoom level indicator** (☞ pg. 25)
㉓	**P.AE/Effect indicator** (☞ pg. 40)
㉔	**FADE/WIPE indicator** (☞ pg. 34)

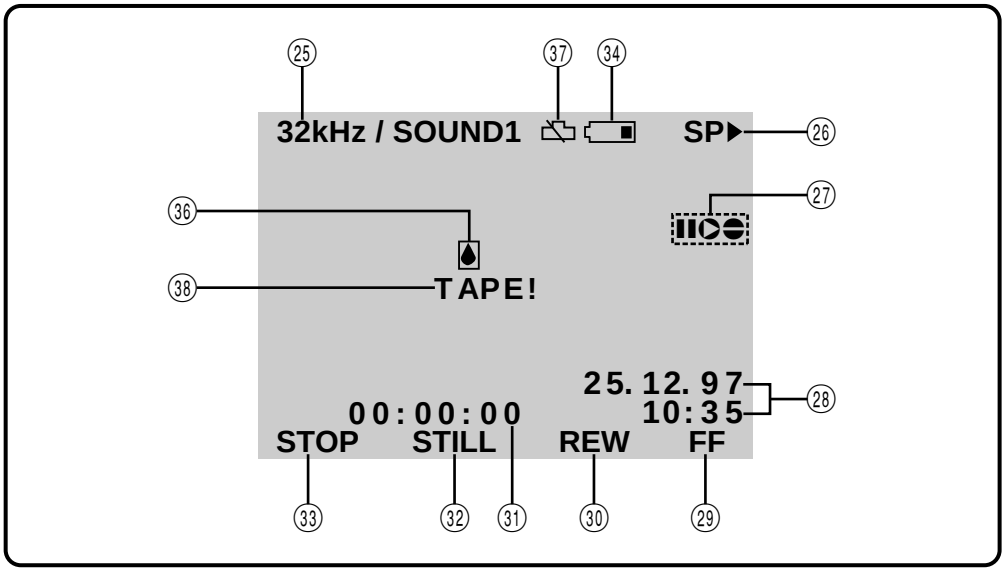

LCD Monitor Indications During Playback

No.	NAME & FUNCTION
㉕	**Playback sound mode display** (☞ pg. 55)
㉖	**"Tape Running" indicator** Cassette mark appears when no tape is loaded or a tape reaches its end.
㉗	**Audio Dubbing/Insert Editing mode indicator** (☞ pg. 65, 66)
㉘	**Date/Time Display** (☞ pg. 55)
㉙	**Fast-Forward indication** (☞ pg. 49)
㉚	**Rewind indication** (☞ pg. 49)
㉛	**Time Code Display** (☞ pg. 55)
㉜	**Play/Pause indication** (☞ pg. 49) "STILL" is displayed during playback.
㉝	**Stop indication** (☞ pg. 49)

Warning Indications

No.	NAME & FUNCTION
㉞	**"Battery Low" indicator** Changes as follows according to the remaining power level: → → → When the battery power is coming to an end, the battery indicator ( ) blinks in the LCD monitor. After indication blinks, power turns off automatically. Replace the battery pack with a fully charged one.
㉟	**Head clog warning** At the start of recording, appears and blinks if dirt is detected on heads. Stop recording and clean the heads using the Cleaning Cassette. (☞ pg. 78)
㊱	**Condensation warning** When this indicator appears, all functions are disabled. Turn the unit off for a few hours, and when you turn it on again the indicator should disappear.
㊲	**Clock Battery warning** Appears when the clock (lithium) battery is not in place or exhausted. For inserting or replacing the clock battery, refer to page 11.
㊳	**"No Tape Loaded" indicator** Appears for 10 seconds after power is turned on if there's no tape loaded.
—	**"Tape End" indicator** (☞ pg. 22)
—	**An error number (E01, etc.) appears** (☞ pg. 71) Consult your nearest JVC dealer.
—	**"ERROR: REFER MANUAL" indicator** (☞ pg. 65, 66) Appears when Audio Dubbing or Insert Editing is impossible.

JLIP Video Capture Docking Station

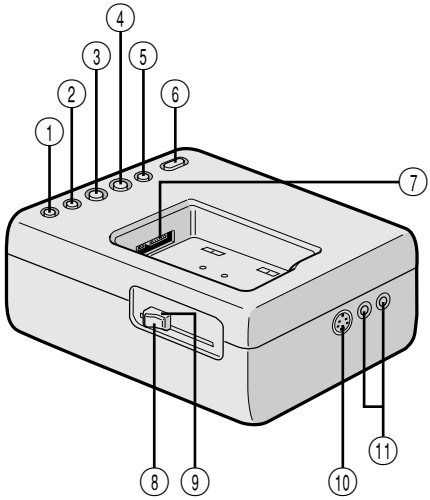

Use of the JLIP Video Capture Docking Station enables you to capture video images from video sources such as camcorders and VCRs.
Also refer to the JLIP Video Capture Docking Station's instruction manual.

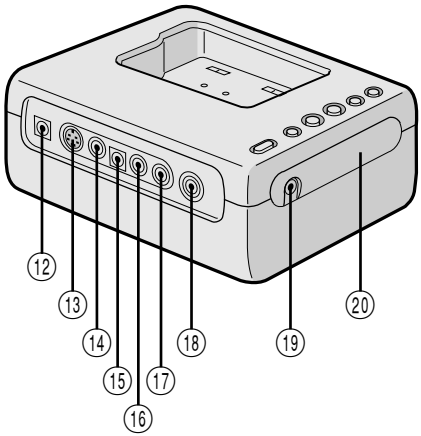

① **Fast-Forward (FF) button**
② **Rewind (REW) button** ..... ☞ pg. 62
③ **STOP button** ..... ☞ pg. 58
④ **PLAY button** ..... ☞ pg. 56
⑤ **PAUSE button**
⑥ **EDIT button** ..... ☞ pg. 62
⑦ **Multi connector**
Connect to the camcorder's multi connector. To avoid malfunction, do not touch this connector.
⑧ **RELEASE button** ..... ☞ pg. 51
⑨ **Lock lever** ..... ☞ pg. 51
⑩ **DIGITAL jack**
• Connect to COM port (RS-232C).
⑪ **JLIP jack (joint Level Interface Protocol)**
• It is used to connect the camcorder to a device such as a personal computer.
For further detail consult your nearest JVC dealer. Information (in English) is also available at our home page: http://www.jvc-victor.co.jp/
⑫ **DC input jack** ..... ☞ pg. 51
⑬ **S-Video output jack** ..... ☞ pg. 52
Outputs S-Video signal.
⑭ **Video output jack** ..... ☞ pg. 52
⑮ **DC output jack**
For dealer use.
⑯ **Audio output jack [L]** ..... ☞ pg. 52
⑰ **Audio output jack [R]** ..... ☞ pg. 52
⑱ **CAPTURE INPUT (EXT.)/PRINTER connector**
• Connects to the optional video printer's video output connector. This allows you to watch the image from the video printer on the LCD monitor without connecting to a television (☞ pg. 49).
• When the VIDEO cable is connected to this connector, the date and time code are not displayed on the LCD monitor. To print out a scene with its date, connect the video printer's video output connector to a TV and operate the video printer using a TV monitor.
⑲ **EDIT jack** ..... ☞ pg. 60
⑳ **Remote control sensor** ..... ☞ pg. 56

Battery Packs

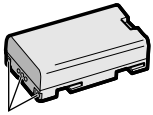
Terminals

The supplied battery pack is a lithium-ion battery. Before using the supplied battery pack or an optional battery pack, be sure to read the following cautions:

1. **To avoid hazard . . .**
   .... **do not** burn.
   .... **do not** short-circuit the terminals.
   .... **do not** modify or disassemble.
   .... **do not** expose the battery to temperatures exceeding 60°C, as this may cause the battery to overheat, explode or catch fire.
   .... use only specified chargers.
2. **To prevent damage and prolong service life . . .**
   .... **do not** subject to unnecessary shock.
   .... charge in an environment where temperatures are within the tolerances shown in the chart below. This is a chemical reaction type battery—cooler temperatures impede chemical reaction, while warmer temperatures can prevent complete charging.
   .... store in a cool, dry place. Extended exposure to high temperatures will increase natural discharge and shorten service life.
   .... avoid prolonged uncharged storage.
   .... remove from charger or powered unit when not in use, as some machines use current even when switched off.
3. **To prevent damage to the camcorder . . .**
   .... replace the battery pack when it begins to deliver less recording time per charge.

NOTE:

It is normal for the battery pack to be warm after charging, or after use.

Temperature Range Specifications
Charging ..... 10°C to 35°C
Operation ..... 0°C to 40°C
Storage ..... –10°C to 30°C

NOTES:

- *Recharging time is based on room temperature of 20°C.*
- *The lower the temperature, the longer recharging takes.*

Cassettes

To properly use and store your cassettes, be sure to read the following cautions:

1. **During use . . .**
   .... make sure the cassette bears the Mini DV mark.
   .... be aware that recording onto prerecorded tapes automatically erases the previously recorded video and audio signals.
   .... make sure the cassette is positioned properly when inserting.
   .... do not load and unload the cassette repeatedly without allowing the tape to run at all. This slackens the tape and can result in damage.
   .... do not open the front tape cover. This exposes the tape to fingerprints and dust.
2. **Store cassettes . . .**
   .... away from heaters or other heat sources.
   .... out of direct sunlight.
   .... where they won't be subject to unnecessary shock or vibration.
   .... where they won't be exposed to strong magnetic fields (such as those generated by motors, transformers or magnets).
   .... vertically, in their original cases.

Main Unit

1. **For safety, DO NOT . . .**
   .... open the camcorder's chassis.
   .... disassemble or modify the unit.
   .... short-circuit the terminals of the battery pack. Keep it away from metallic objects when not in use.
   .... allow inflammables, water or metallic objects to enter the unit.
   .... remove the battery pack or disconnect the power supply while the power is on.
   .... leave the battery pack attached when the camcorder is not in use.
2. **Avoid using the unit . . .**
   .... in places subject to excessive humidity or dust.
   .... in places subject to soot or steam such as near a cooking stove.
   .... in places subject to excessive shock or vibration.
   .... near a television set.
   .... near appliances generating strong magnetic or electric fields (speakers, broadcasting antennas, etc.).
   .... in places subject to extremely high (over 40°C or 104°F) or extremely low (under 0°C or 32°F) temperatures.

CONTINUED ON NEXT PAGE

3. **DO NOT leave the unit . . .**
   .... in places of over 50°C (122°F).
   .... in places where humidity is extremely low (below 35%) or extremely high (above 80%).
   .... in direct sunlight.
   .... in a closed car in summer.
   .... near a heater.
4. **To protect the unit, DO NOT . . .**
   .... allow it to become wet.
   .... drop the unit or strike it against hard objects.
   .... subject it to shock or excessive vibration during transportation.
   .... keep the lens directed at extremely bright objects for long periods.
   .... expose the lens to direct sunlight.
   .... carry it by holding the LCD monitor.
   .... swing it excessively when using the hand strap.
   .... swing the soft camera case excessively when the camcorder is inside it.
5. **Dirty heads can cause the folowing problems:**

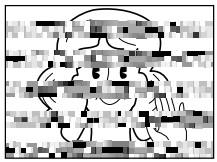

- No picture during playback.
- Blocks of noise appear during playback.
- During recording, the Head Clog Warning indicator "⊗" appears in the LCD moitor.

In such cases, use the optional Cleaning Cassette. Insert it and play back. If the cassette is used more than once consecutively, damage to the video heads may result. After the camcorder plays back for about 20 seconds, it stops automatically. Also refer to the Cleaning Cassette's instructions.
If, after using the Cleaning Cassette, the problems still exist, consult your nearest JVC dealer.

LCD monitor

1. **To prevent damage to the LCD monitor, DO NOT . . .**
   .... push it strongly or apply any shocks.
   .... place the camcorder with the LCD monitor on the bottom.
2. **To prolong service life . . .**
   .... avoid rubbing it with coarse cloth.
3. **Make be aware of the following phenomena for LCD monitor use.**
   These are not mulfunctions. . . .

- While using the camcorder, the surface around the LCD monitor and/or the back of the LCD monitor may heat up.
- If you leave power on for a long time, the surface around the LCD monitor becomes hot.

About moisture condensation . . .

- You have observed that pouring a cold liquid into a glass will cause drops of water to form on the glass' outer surface. This same phenomenon occurs on the head drum of a camcorder when it is moved from a cool place to a warm place, after heating a cold room, under extremely humid conditions or in a place directly subjected to the cool air from an air conditioner.
- Moisture on the head drum can cause severe damage to the video tape, and can lead to internal damage to the camcorder itself.

Serious malfunctioning

If malfunctioning occurs, stop using the unit immediately and consult your local JVC dealer.

The camcorder is a microcomputer-controlled device. External noise and interference (from a TV, a radio, etc.) might prevent it from functioning properly. In such cases, first disconnect its power supply unit (battery pack, AC Power Adapter/Battery Charger, etc.) and clock battery; and then re-connect it and proceed as usual from the beginning.

MAIN UNIT

General

Power	: DC 6.3 V (using AC Adapter) DC 7.2 V (using Battery)
Power consumption	: 8.6 W
Format	: DV Format (SD mode)
Signal format	: PAL Standard
Video signal recording format	: Digital Component Recording
Data compression rate	: 25 Mbps
Digital compression technology	: DCT (Discrete Cosine Transform) & VLC (Variable Length Coding)
Cassette	: MINI DV Cassette
Tape Speed	: SP: 18.8 mm/sec. LP: 12.5 mm/sec.
Maximum recording time	: SP: 60 min. LP: 90 min. (using DVM-60 cassette)
Continuous recoring time	: Approx. 60 min. (using fully charged BN-V812U Battery Pack)
Fast-Forward/Rewind Time	: Approx. 100 sec. (using DVM-60 cassette)
Pickup	: 1/3" CCD (single) 670,000 pixels (recording area approx. 330,000 pixels)
Zoom	: 10x Optical Zoom 20x/100x Digital Zoom
Lens diameter	: F1.6, f = 4.5∿45 mm
(Filter Diameter)	ø27 mm
LCD monitor	: 2.5", 180,000 pixel polysilicon TFT/LCD panel
Minimum required illumination	: 14 lx, 7 lx (during 1/30 sec. slow shutter)
White balance	: Automatic/manual
Iris	: Automatic/lock
Microphone	: Condensor type/stereo
Operating temperature	: 0 — 40°C
Operating humidity	: 35 — 80%
Storage temperature	: –20 — 50°C
Dimensions	: 59 (W) x 156 (H) x 94 (D) mm
Weight	: Main unit approx. 620 g
During recording	Approx. 730 g (With BN-V812U Battery Pack, Cassette M-DV30ME, Hand Strap)

Audio

Sampling frequencies	: 48 kHz, 32 kHz
Channels	: 2 (48 kHz) 4 (32 kHz)
Quantum Bits	: 16 linear (48 kHz) 12 non-linear (32 kHz)
Speaker	: Monaural

Connectors

Microphone input connector	: ø3.5 mm, –62 dBs stereo
AUDIO output connector	: ø3.5 mm, (–8 dBs, 1 kΩ) analog output
VIDEO output connector	: ø3.5 mm, (1 Vp-p, 75 Ω) analog output
Headphone connector	: ø3.5 mm, stereo
DC input connector	: 6.3 V
Multi connector	: 34-pin

** Specifications shown are for SP mode unless otherwise indicated. E & O.E. Design and specifications subject to change without notice.*

BATTERY PACK

Power : 7.2 V/1,250mAh
Dimensions : 38 mm (W) x 20 mm (H) x 70 mm (D)
Weight : Approx. 88 g

REMOTE CONTROL UNIT

Power : DC 3 V (Lithium Battery CR2025)
Battery Life : Approx. 1 year (depending on usage)
Effective distance : Approx. 5 m (front shaft)
Operating temperature : 0°C — 40°C
Storage temperature : –20°C — 50°C
Dimensions : 54 mm (W) x 86 mm (H) x 12 mm (D)
Weight : Approx. 26 g (with battery installed)

AC ADAPTER/CHARGER

Power : AC 110–240 V, 50/60 Hz
Power consumption : 20 W
Output power : DC 7.2 V, 1.2 A (charge)
: DC 6.3 V, 1.8 A (VTR)
Operating temperature : 0°C — 40°C (when charging, 10°C — 35°C)
Dimensions : 94 mm (W) x 36 mm (H) x 122 mm (D)
Weight : Approx. 270 g

JLIP VIDEO CAPTURE DOCKING STATION

Connectors
S-Video (S2 output) : Output Y: 1.0 Vp-p, 75 ohms
C: 0.3 Vp-p, 75 ohms
Video : Input 1.0 Vp-p, 75 ohms (pin jack)
(CAPTURE INPUT (EXT.)/PRINTER connector)
: Output 1.0 Vp-p, 75 ohms (pin jack)
(VIDEO output connector)
Audio : Output -8 dB, 1 kiloohm (pin jack)
JLIP (x 2) : 3.5 mm dia., 4-pole, mini-head jack
(compatible with EIAJ RC-5325 plug)
Digital : Mini DIN 8-pin
Multi-connector : 34-pin
Editing connector : 3.5 mm dia., 2-pole
DC output : 5 V DC
Captured image sizes : 768 x 552 pixels, 80 x 60 pixels
Operating temperatures : 5 to 30° C
External dimensions : 113W x 61H x 145D mm
Weight : Approx. 395 g
Power supply : 6.3 V DC

Iris
Works like the pupil of the human eye. In a well-lighted environment, the human pupil contracts to keep too much light from entering. In low lighting, the pupil dilates to allow more light in.

Colour temperature
A measurement in Kelvin degrees which indicates the colour contents of a light source; bluish light has a higher colour temperature than reddish light. To reproduce white as white under different types of lighting, the chrominance signal must be adjusted to match the light source's colour temperature.
(See "White Balance".)

AC Adapter
Used when charging the battery. Or, when connected directly to the camcorder, it can be used as a power supply.

Auto focus
Focus can be set for automatic adjustment, for beginners who find the adjustment difficult.

On-screen display
Displays in the viewfinder can be shown on a connected TV.

Strobe
In the early days of movie making, 1-second strobes were uncommon, so movies didn't have the smooth movement they have today. This function gives movies the old-film flicker effect.

Record/Standby
Engage this mode by pressing START/STOP during Stop or Record modes. It means that the camcorder, or your VCR, is paused and ready to record.

CCD (Charge coupled device)
Solid-state imaging device used in camcorders as the camera's image pickup; analogous to the eye's retina except that picture information is output as electric signals.

Dew sensor
If condensation forms inside the unit due to a temperature change, the indicator appears in the viewfinder, and the camcorder becomes unusable.

Digital zoom
10x Optical zoom image is taken and digitally processed to provide 20x or 100x magnified images.

Digital Image Stabilizer
When shooting while holding the camcorder in your hand, even if you think you're perfectly still, there is slight movement. This function compensates for that movement.

Fade
An effect used in scene transitions. Like movies or TV, the scene gradually goes black or white (fade out), or comes in from a black or white screen (fade in).

White balance
A term that refers to the correctness of colour reproduction under various lighting. If the white balance is correct, all other colours will be accurately reproduced.

Wipe
An effect used in scene transitions. A scene disappears as though it's being wiped off the screen (wipe out), or appears as though it's wiped on (wipe in).

A

Animation ..... ☞ pg. 33
Audio Dubbing ..... ☞ pg. 65
Auto Focus ..... ☞ pg. 46
Auto Shut off ..... ☞ pg. 27

B

Battery ..... ☞ pg. 8
Battery Low ..... ☞ pg. 75
Beep/Tally ..... ☞ pg. 33

C

Charging ..... ☞ pg. 8
Cleaning The Camcorder ..... ☞ pg. 72
Connections ..... ☞ pg. 10, 50, 51, 52

D

Date/Time Display ..... ☞ pg. 12
Date/Time Settings ..... ☞ pg. 12
Digital Image Stabilizer ..... ☞ pg. 31
Digital Zoom ..... ☞ pg. 25
Docking Station ..... ☞ pg. 51
Dubbing ..... ☞ pg. 58

E

Editing ..... ☞ pg. 58
Exposure Control ..... ☞ pg. 47

F

5SD ..... ☞ pg. 28
5-Second Mode ..... ☞ pg. 28
Fade-In/Out ..... ☞ pg. 35
Focus Adjustment ..... ☞ pg. 46

I

Insert Editing ..... ☞ pg. 66
Iris ..... ☞ pg. 48
Iris Lock ..... ☞ pg. 48

L

LCD monitor indications ..... ☞ pg. 74, 75
Lithium Battery ..... ☞ pg. 3
Loading A Tape ..... ☞ pg. 13

M

Motor Drive Mode ..... ☞ pg. 26

O

On-Screen Menus ..... ☞ pgs. 30, 32

P

P.AE/Effects ..... ☞ pg. 40
Photo Frame ..... ☞ pg. 33
Play Back on TV ..... ☞ pg. 50, 52, 54, 56, 57
Play Back Zoom ..... ☞ pg. 56
Power (AC/Battery) ..... ☞ pgs. 9, 10

R

Random Assemble Editing ..... ☞ pg. 60
Record Safety Tab ..... ☞ pg. 13
Record/Standby ..... ☞ pg. 19
Recording Format ..... ☞ pg. 77
Remote Control ..... ☞ pg. 17

S

Self-Timer ..... ☞ pg. 29
Set VCR Brand ..... ☞ pg. 59
Shutter/Slow shutter ..... ☞ pg. 41
Slow Motion Playback ..... ☞ pg. 53
Snapshot Mode ..... ☞ pg. 26
Snapshot Search ..... ☞ pg. 27
Sound ..... ☞ pg. 33
Squeeze ..... ☞ pg. 31
Still Play Back ..... ☞ pg. 27, 49
Strobe ..... ☞ pg. 41

T

Tapes ..... ☞ pg. 13
Time Code ..... ☞ pg. 21, 77

W

White Balance ..... ☞ pg. 44
Wide ..... ☞ pg. 31
Wipe In/Out ..... ☞ pg. 35

EN

GR-DVM1

JVC

VICTOR COMPANY OF JAPAN, LIMITED

COPYRIGHT© 1997 VICTOR COMPANY OF JAPAN, LTD.

EG Printed in Japan
0297MKV*UN*SN